EDITOR'S NOTE

ICMA has decided to rename the IPMA Handbook as the "ICMA Primary Market Handbook" with immediate effect.

ICMA is updating, in relation to the soft/online copy and new hard copy purchases of the Handbook, most "International Primary Market Association" and "IPMA" references to 'International Capital Market Association' and 'ICMA' respectively (just excepting some factual historic references and quoted text, namely item 6-B-XII, item 7-IV-B, the introduction to item 7-VI and items 8-GN15, 8-PS1 and 8-PS2).

The dates of individual Handbook items have not been updated as a result of this change of form and not substance. Existing hardcopy handbooks need not therefore be replaced at this time. ICMA has separately begun a general review to restructure the Handbook that will result in a replacement of the existing Handbook in due course.

ICMA anticipates that market participants might, in practice, use the names "IPMA Handbook" and "ICMA Primary Market Handbook" interchangeably for some time. Similarly, ICMA also anticipates that "International Capital Market Association" and "International Primary Market Association" references, as well as 'ICMA' and 'IPMA' prefixes/suffixes, concerning Handbook items (for example the "ICMA Standard Form Agreement Among Managers Version 1") might also be used interchangeably.

ICMA considers that use of any of the above terminology will ultimately be understood by market participants. ICMA however expects that market participants will seek to use the updated terminology wherever practical.

In case of any queries, please contact Ruari Ewing (+44 20 7213 0316 / ruari.ewing@icmagroup.org) or Lalitha Colaco-Henry (+44 20 7213 0318 / lalitha.colaco-henry@icmagroup.org).

April 2011

INTERNATIONAL CAPITAL MARKET ASSOCIATION

incorporating the
International Primary Market Association

ICMA PRIMARY MARKET HANDBOOK

(IPMA HANDBOOK)

Recommendations, Guidance Notes
and other documentation

Published by ICMA
www.icmagroup.org
© ICMA

Designed and typeset by Peppercorn Publications, London, England

MEMBERSHIP

For the full list of ICMA Members please refer to our website
www.icma-group.org

CONTENTS

SECTION ONE
RECOMMENDATIONS APPLICABLE TO ISSUES OF DEBT INSTRUMENTS

Notes Applicable to All Recommendations in Section One

1.1 Early Disclosure of Terms
1.2 Timing of Allotments
1.3 Open Underwriting Commitment
1.4 Co-Manager without Underwriting Obligation
1.5 Distribution of Draft Documentation and Execution of Agreements
1.6 *This Recommendation has been withdrawn*
1.7 Debt and Equity-Linked Issue Stabilisation Accounts
1.8 Payment and Reimbursement of Expenses and Fees
1.9 Late Payment of Fees
1.10 Delivery of Definitive Certificates
1.11 *This Recommendation has been withdrawn*
1.12 Increases in Issue Amounts/Fungible Issues
1.13 Selling Groups
1.14 Debt Programmes: Additional Recommendations
1.15 Conditions Precedent
1.16 Enforcement of Securities' Holders' Rights
1.17 Name Give-Up
1.18 Lead Counsel to Managers/Dealers
1.19 Day Count Fraction: Use of Actual/Actual Convention
1.20 Pot Distribution
1.21 Global Bond Issues

1.22 Timely Announcements to Syndicates and Selling Groups
1.23 Sovereign Issuer Collective Action Clauses
1.24 Internal Offerings of Domestic Debt Securities
1.25 Stabilisation
1.26 Including the Date of Base Prospectus in Screen Announcements
1.27 Availability of Draft Offering Documentation
1.28 Availability of Prospectus
1.29 Relationship between Lead Managers and Managers
1.30 Pre-sounding of Transactions
1.31 Joint Leads without responsibility for the Order Book
1.32 New Issue Processes

SECTION TWO
RECOMMENDATIONS APPLICABLE TO OFFERINGS OF EQUITY AND EQUITY-LINKED DEBT ISSUES

Notes Applicable to All Recommendations in Section Two

2.1 Syndicate Information
2.2 Execution of Agreements
2.3 Fees and Late Payment
2.4 Conditions Precedent
2.5 Stabilisation
2.6 Order Clarification

Schedules

1. ICMA Syndicate Memorandum Check-list for issues or offerings of equity or equity-linked instruments
2. ICMA Disclosure Check-list for issues or offerings of equity or equity-linked instruments

SECTION THREE
RECOMMENDATIONS APPLICABLE TO ISSUES OF EQUITY-LINKED DEBT INSTRUMENTS

3.1 Stabilisation

SECTION FOUR
RECOMMENDATIONS AND GUIDANCE NOTES APPLICABLE TO MEDIUM TERM NOTE PROGRAMMES

Notes Applicable to All Recommendations and Guidance Notes in Section Four

4.1 Execution of Agreements and Content of Programme Documentation

4.2 Conditions Precedent

4.3 Meetings and Conference Calls with Issuers

4.4 Amendments to Programme Documentation by Dealers other than the Arranger

4.5 Status of Arranger

4.6 Distribution of Programme Documentation

4.7 Highlighting Changes in Medium Term Note Programmes

4.8 Relationship between Arrangers and Dealers

Guidance Notes

1. Importance of Accurate, Complete and Current Information in Prospectuses

2. Reverse Enquiries in Medium Term Note Programmes

3. Legal Opinions for Medium Term Note Programmes

4. Disclosure of Ratings in connection with Medium Term Note Programmes *(currently under review)*

5. Authorisation of Notes and Guarantees issued under Medium Term Note Programmes

SECTION FIVE
RECOMMENDATIONS APPLICABLE TO EURO COMMERCIAL PAPER

Notes Applicable to All Recommendations in Section Five

5.1 ECP Conventions

SECTION SIX
APPENDICES

APPENDIX A

ICMA Screen and Telephone Invitation Check-list for issues of debt and equity-linked debt instruments

APPENDIX B

Explanatory notes relating to issues of debt and equity-linked debt instruments

I Guarantees

II Ratings

III Ranking of the Bonds

IV Negative Pledge

V Market Related Call Provisions

VI Taxation, Tax Redemption and Protection Against Identification or Certification

VII Sales Restrictions, Private Placements

VIII *This has been incorporated into Recommendation 1.8*

IX Force Majeure

X Cross Default

XI Expenses
XII Pot System
XIII Pre-Sounding, Bookbuilding and Allocations

SECTION SEVEN
ICMA STANDARD DOCUMENTATION AND STANDARD LANGUAGE

I

Standard Form Agreement Among Managers

Version 1: Fixed-Price Non Equity-Related Issues – with or without selling group – March 2004
French Law Schedule
German Law Schedule
New York Law Schedule

Version 2: Managers only Equity-Related Issues – April 2005
French Law Schedule
German Law Schedule

Version 3: *Withdrawn and replaced by Version 2 – April 2005*

II

(a) ICMA Pro Forma "Final Terms" and Pricing Supplement for Medium Term Note Programmes: Explanatory Memorandum

(b) Pro forma final terms for medium term note programmes for use in connection with issues of securities with a denomination of less than €50,000 to be admitted to trading on an EEA regulated market and/or offered to the public in the EEA

(c) Pro forma final terms for medium term note programmes for use in connection with issues of securities with a denomination of

at least €50,000 to be admitted to trading on an EEA regulated market

(d) Pro forma final terms for medium term note programmes for use in connection with issues of securities admitted to trading on the UK Professional Securities Market

(e) Pro forma pricing supplement for medium term note programmes for use in connection with issues of securities which are not subject to the Prospectus Directive

III

ICMA compliant language for Actual/Actual interest calculations in euro-denominated fixed rate bond issues

IV

ICMA Standard Language for the EU Directive on the Taxation of Savings

V

Notice No. 2 on Contracts (Rights of Third Parties) Act 1999

VI

Standard Form Arrangement and Comfort Letters for Stand-Alone Bonds

VII

Standard Form Stabilising Agent Appointment Letter – ICMA Agency Terms – *withdrawn September 2005*

VIII

Standard Collective Action Clauses (CACs) for the Terms and Conditions of Sovereign Notes

IX

Standard Form Selling Restrictions

A Debt (UK)

B Equity (EEA Prospectus Directive)

X

ICMA Standard Form ECP Documentation

(a) Dealer Agreement

(b) Information Memorandum

(c) Form of Multicurrency Global Note

XI

Market Abuse Directive – Stabilisation Safe Harbour

(a) Pre-Stabilisation Announcement

(b) Post-Stabilisation Announcement

(c) Stabilisation Legend

SECTION EIGHT
ICMA GUIDANCE NOTES/PRESS STATEMENTS

Guidance Notes

1. Printing Definitive Certificates
2. Disclosure of Side Arrangements in the Context of Force Majeure
3. Fungible Issues: Recommendation 1.12.2
4. Due Diligence
5. Limited Payment Obligations
6. *This has been withdrawn*
7. *This has been moved to Section Four Guidance Note 1*
8. Provision of Information and Documents to Intermediaries

9. *This has been moved to Section Four Guidance Note 2*
10. *This has been moved to Section Four Recommendation 4.7*
11. *This has been moved to Section Four Guidance Note 3*
12. *This has been moved to Section Four Guidance Note 4*
13. *This has been moved to Section Four Guidance Note 5*
14. *This has now been moved to ICMA Standard Documentation and Standard Language IV, Annex B*
15. DMO Calculation for Termination Calculation in Sterling Bond Issues
16. Information Clauses in Sovereign Debt Issues
17. The Calculation Agency Role with respect to certain Derivative-Linked Securities
18. Denominations of €50,000 and integral multiples of €1,000
19. New Safekeeping Structure for Registered Notes – Changes to Legal Documentation
20. Prospectus Directive – Considerations for Exempt Offers and Non-exempt Offers of Sub-€50,000 Denomination Bonds in the EAA

Press Statements

1. Disclosure of Distribution
2. Semi-Permanent Global Notes
3. Joint Statement on Market Conventions for the Euro

SECTION ONE

RECOMMENDATIONS APPLICABLE TO ISSUES OF DEBT INSTRUMENTS

NOTES APPLICABLE TO ALL RECOMMENDATIONS IN SECTION ONE

1. The Recommendations in Section One apply to all issues of debt securities, including syndicated issues under medium term note and debt issuance programmes, lead managed by one or more ICMA Members with cross-border distribution ("International Issues"), including asset and mortgage-backed issues, structured issues and, to the extent relevant, sole lead managed issues. They do not apply to exchangeable and convertible debt issues; these are addressed in Section Three, which is being revised.

2. These Recommendations do not apply to covered bonds, including Pfandbriefe, cedulas hipotecarias and obligations foncières, except to the extent set out in Recommendation 1.24 (International Offerings of Domestic Debt Securities).

3. These Recommendations apply to Global Bonds lead managed by ICMA Members to the extent set out in Recommendation 1.21.

4. ICMA Members acting as Lead Managers in International Issues will be presumed – unless and to the extent that the contrary is stated in any telephone invitation and in the Invitation to Managers – to be applying all relevant ICMA Recommendations to the issue.

If some but not all of ICMA Recommendations are to be applied, this fact, together with a statement of which Recommendations are excluded, should be stated.

5. Whenever the term *Lead Manager* is used, this is presumed to be the Manager expressed to be the Lead Manager or Bookrunner in the Invitation to Managers. The Invitation to Managers is the screen invitation, electronic message, fax, telex or other document inviting each Manager to participate in an issue.

DEBT INSTRUMENTS

RECOMMENDATION 1.1

EARLY DISCLOSURE OF TERMS

1. The invitation telex should be considered as the basis of the syndicate participant's commitment subject to the signed syndicate agreements. The Lead Manager should however advise all invited parties by screen or telephone at the earliest possible moment of the basic commercial and non-commercial terms of an issue. In the case of screen displays the telephone conversation may be limited to the invitation.

2. Apart from the commercial terms of an issue, the screen or telephone invitation and/or invitation telex should as a minimum address the following matters (on which further information may be contained in Appendix B under the headings below or elsewhere in the ICMA Primary Market Handbook):

- Guarantees
- Ratings
- Ranking
- Negative Pledge
- Market Related Call Provisions
- Taxation, Tax Redemption and Protection Against Identification or Certification
- Sales Restrictions, Lock-up Provisions and Private Placement Arrangements

– Expense Caps, Payment of Commissions, Deductibility of Expenses, Stabilisation Accounts

– Force Majeure

– Cross Default

– Governing Law

– Form in which securities will be available (permanent global/ semi-permanent global/definitive)

3. An early positive response to a screen or telephone invitation may be reversed upon receipt of the invitation telex only if there are changes in or additions to the basic commercial or non-commercial terms of the issue. If there are subsequent material changes in or additions to the invitation telex (whether in the agreements or otherwise), commitments may be withdrawn but for these reasons only.

4. If the issue is under a Debt Programme, the Lead Manager should promptly send to any manager who requests it a complete copy of:

– the "base" documentation under which the issue is being made (for example, the dealer agreement); and

– the prospectus (or equivalent document) for the Debt Programme, including any supplement or updates to it.

In addition, the Lead Manager will use its best efforts to procure that the issuer promptly supplies to each manager such additional copies of the prospectus (or equivalent document) and any supplement or updates to it as that manager may require.

5. If the issue is under a Debt Programme, the screen or telephone invitation and/or invitation telex should, in addition to the matters set out in paragraph 2, indicate:

– that fact;

– whether there will be a requirement for the managers to confirm to the Lead Manager when they have completed distribution of securities and, if so, the identity of the person to whom that confirmation should be sent; and

– securities (if any) with which the securities to be issued are to be fungible.

Notes

– The information contained in Appendix B serves to facilitate early disclosure and is in no way intended to substitute for professional advice.

– Appendix A contains a full check-list of disclosure requirements for debt and equity-related debt instruments.

DEBT INSTRUMENTS

RECOMMENDATION 1.2

TIMING OF ALLOTMENTS

Final allotments, if any, to managers, whether the issue is structured as a pot, partial pot or full retention deal, should be made no later than pricing of the issue, except in the case of pre-priced issues. Allotments for pre-priced issues should be made no later than the time managers are notified of their commitments, which should be by close of business on the day the issue is launched. Securities not allotted in accordance with this Recommendation should be retained by the Lead Manager(s)/Joint Bookrunners for his/their own account and risk.

The application of this Recommendation does not obviate the obligation of management group members under other provisions of the syndicate agreements, such as the provisions relating to defaulting syndicate members.

DEBT INSTRUMENTS

RECOMMENDATION 1.3

OPEN UNDERWRITING COMMITMENT

Where the initial underwriting commitment offered to prospective management group members is indicated as a range of amounts, it is recommended that the lower amount shall not be less than 75% of the higher amount.

PROTECTION

In pre-priced offerings of debt and equity-related instruments which are syndicated among managers only, Lead Managers should grant pre-allotments of not less than 50% of the finalised or expected minimum underwriting commitments if so required by management group members at the time of their acceptances of the syndicate invitations.

DEBT INSTRUMENTS

RECOMMENDATION 1.4

CO-MANAGER WITHOUT UNDERWRITING OBLIGATION

Lead Managers should not offer underwriting participations on the basis of a tacit or overt understanding or agreement to repurchase the commitment or restrict the allotment to a significantly reduced portion of the commitment.

DEBT INSTRUMENTS

RECOMMENDATION 1.5

DISTRIBUTION OF DRAFT DOCUMENTATION AND EXECUTION OF AGREEMENTS

1. In respect of each issue, it is the duty of the Lead Manager to send to each of the managers the final version of the agreements and any auditors' arrangement letter required to be executed by them or on their behalf together with the latest draft of the prospectus or offering circular (if one is being prepared for the issue) for receipt not later than two full business days prior to the signing.

In the case of an issue under a Debt Programme, the documentation to be provided under this Recommendation includes the pricing supplement for the issue and, if one is being produced, any supplement to the information memorandum, prospectus or offering circular for the programme.

If a 'red herring' or preliminary prospectus is being produced for an issue, the Lead Manager must send the latest draft to any manager whose name is to be printed on the preliminary prospectus, for receipt not later than two full business days before the preliminary prospectus is published. A manager whose name is to be printed on the 'red herring' or preliminary prospectus is entitled to assume that the draft underwriting agreement will be circulated at the same time, unless notified by the Lead Manager to the contrary. 'Prospectus' includes offering circulars, information memoranda, or any similar document.

If the above practices cannot be observed, then, exceptionally but alternatively, the Lead Manager will make such documentation available not less than two full business days prior to the signing in its offices in the place of signing and, if the signing is not in London, also in the offices of its nominated representative in London.

2. Lead Managers requesting managers to appoint authorised signatories to execute agreements on their behalf, and managers in providing such appointments, should use the following form:

Quote

We, [Name of your Institution], hereby appoint [Name of your signatory] or [Names of Lead Managers' signatories] acting alone with power to execute and deliver on our behalf the [Name of documents] in connection with the issue by [Name of issuer] of its [Description of securities being issued] and to take any other action necessary in connection with such issue.

By: ..... Dated: .....
Authorised representative(s)

End quote

Note

It is recognised that adaptations to the above form may be required to be made by managers to reflect particular local or corporate requirements.

DEBT INSTRUMENTS

RECOMMENDATION 1.6

This Recommendation has been withdrawn

December 2002

DEBT INSTRUMENTS

RECOMMENDATION 1.7

STABILISATION ACCOUNTS

1. Price stabilisation by a Lead Manager should assist in the orderly distribution of an issue, thus promoting an orderly secondary market and ultimate liquidity. Lead Managers should therefore only enter into stabilisation activity in order to encourage the orderly primary distribution of securities. Stabilisation activity should cease on the closing date of the issue.

2. Lead Managers should not deduct stabilisation costs from fees paid to syndicate participants (or otherwise stabilise for the account of the syndicate).

3. Paragraph 2 does not apply between Joint Bookrunners and Joint Lead Managers of an issue. When they have agreed that stabilisation will be carried out for a particular issue, the Joint Bookrunner or Joint Lead Manager appointed as Stabilising Manager, and a Stabilising Manager who is a Joint Bookrunner or Joint Lead Manager, may charge stabilisation losses to the other Joint Bookrunner(s)/Joint Lead Manager(s) and must account to the other Joint Bookrunner(s)/Joint Lead Manager(s) for stabilisation profits, in both cases without limit, and pro rata to such manager's underwriting commitment.

DEBT INSTRUMENTS

RECOMMENDATION 1.8

PAYMENT AND REIMBURSEMENT OF EXPENSES AND FEES

1. Managers' fees should be paid no later than closing date.

2. Profits realised or losses incurred as a result of over-allotment or stabilisation activities, including borrowing charges connected therewith and taking into account related hedging activities, should not be added or deducted except in the circumstances described in Paragraph 3 of Recommendation 1.7 on Stabilisation Accounts.

3. Legal costs of the issuer, the cost of the issuer's professional advisers, the prospectus and expenses incurred for the listing, printing and delivery of the bonds or notes and for all necessary approvals should not be charged against fees paid to the syndicate. Appendix B (xi) refers.

4. Direct out-of-pocket expenses of a Lead Manager which exceed the expense reimbursement by the issuer should not be charged against fees paid to the syndicate. Any such excess may be shared by Joint Bookrunners and Joint Lead Managers pro rata to their underwriting commitments. The arrangements for reimbursement of expenses by the issuer, including the amount of any cap on expenses, should be disclosed to the Joint Lead Managers by the Joint Bookrunners when they are invited to join an issue.

5. If a Lead Manager reimburses the issuer for any material amount of its fees or expenses directly associated with the issue of the bonds or notes, such fact should be disclosed in the offering circular or pricing supplement, as appropriate. If the fees for such an issue are

disclosed in the screen announcement, the Lead Manager should state that such fees otherwise payable to the Lead Manager and/or Joint Bookrunners may be subject to some rebate to the issuer. This can be disclosed on the screen using the format 'ICMA/LM Rebate'.

DEBT INSTRUMENTS

RECOMMENDATION 1.9

LATE PAYMENT OF FEES

Lead Managers should settle fees by the date specified in Recommendations 1.8 and 1.20.

If any fees due to a manager have not been paid on the date on which they are due, the Lead Manager should in addition pay interest of 1% per month or part thereof, such interest to be calculated from (but excluding) the date on which the fees are due and to be added to the amount on which interest is so calculated at the end of each period of 30 days thereafter. The interest rate of 1% per month shall apply to all currencies. It shall be added to the payment of the fees but identified separately. In case of dispute the Lead Manager may be asked by ICMA to provide evidence as to the dates when payments were effected.

DEBT INSTRUMENTS

RECOMMENDATION 1.10

DELIVERY OF DEFINITIVE CERTIFICATES

(When Clearstream Banking S.A. and Euroclear Bank S.A./ N.V. System are the Primary Depositaries and Clearers)

1. Unless otherwise precluded by the specific applicability of securities laws or regulations or unless otherwise disclosed in the prospectus, or relevant pricing supplement, any definitive certificates should be made available for exchange as soon as practicable after the closing date of an issue, so as to enable the exchange for the global certificate to take place as soon as possible after the fortieth day after the closing date.

2. In the case where applicable securities regulations preclude the exchange of a global certificate for definitive certificates for a period longer than 40 days after the closing date (such as in the case of an issue with a tap feature), or unless otherwise disclosed in the prospectus, or relevant pricing supplement, any definitive certificates should be made available in exchange for the global certificate as soon as possible after the date on which such exchange is first permissible.

3. As stated in Recommendation 1.1.2, the Lead Manager should provide early disclosure of whether the issue will be in permanent global, semi-permanent global or definitive form. If the issue is to be in semi-permanent global form and to clear in Clearstream Banking and/or Euroclear then, in order to maximise

the fungibility of the issue, for bearer securities the whole issue should be converted to definitive form (but not at the expense of the investors) when an investor gives due notice that he wishes to hold his part of the issue in definitive form.

DEBT INSTRUMENTS

RECOMMENDATION 1.11

This Recommendation has been withdrawn.

December 2002

DEBT INSTRUMENTS

RECOMMENDATION 1.12

INCREASES IN ISSUE AMOUNTS/FUNGIBLE ISSUES

1. When Lead Managers wish to increase the amount of an issue before its payment date, it is incumbent on them to offer each member of the management group an increase in its underwriting commitment on a pro rata basis.

If the issue was launched as a full retention deal, Lead Managers are not required to allot bonds from the increase to managers who accept the offer to increase their underwriting commitment, but must ensure that such managers are entitled to receive a share of the fees payable on the increase, pro rata to their share of the fees on the issue before its increase.

If the issue was launched as a Pot deal, Lead Managers must ensure that each manager who accepts the offer to increase its underwriting commitment is entitled to receive a share of the fees payable on the increase pro rata to its share of the fixed economics fees which applied to the issue before the increase (including any fees for retention bonds, but excluding any incentive or similar pot or strategic reserve fees). Lead Managers are not required to apply the same distribution structure to the increase as to the original issue, or to allot bonds to the management group, but must disclose full details of the structure of the increase in accordance with the requirements of Recommendation 1.20 (Pot Distribution).

Each manager should have the option to accept or decline any increase in its underwriting commitment.

2. A Lead Manager who plans to launch an issue intended to be fungible with an issue previously launched by another Lead Manager should refrain from doing so until after the closing date of the previous issue.

DEBT INSTRUMENTS

RECOMMENDATION 1.13

SELLING GROUPS

1. In deals involving a selling group, the Lead Manager should disclose to the managers on launch that there will be a selling group.

2. It is normal market practice for a selling group to be appointed by a Lead Manager and/or Joint Bookrunners for its/their own account.

3. In retention deals involving a selling group, when it is intended that there will be a claw-back from the managers' allotments:

(a) the managers are entitled to know from the Lead Manager at the time of invitation what the maximum claw-back from their allotment will be as a result of the selling group's demand for paper; and

(b) the claw-back due to the selling group's demand should be determined pro rata to underwriting commitments.

DEBT INSTRUMENTS

RECOMMENDATION 1.14

DEBT PROGRAMMES: ADDITIONAL RECOMMENDATIONS

SELLING RESTRICTIONS / COMMUNICATING COMPLETION OF DISTRIBUTION

It is important to check the underlying sales restrictions when launching a syndicated issue under a Debt Programme. US sales restrictions may be particularly relevant: where the restricted period is determined by completion of distribution (within Reg S, Category 2 or Category 3) it is recommended that the Lead Manager be promptly informed by the Managers when their allotment has been sold.*

REPRINTING AND UP-DATING PROSPECTUS

Where the issue is to be made under a Debt Programme, if the prospectus for the issue (or other equivalent document) is dated earlier than one year from the date of the signing of the issue, it is recommended that the prospectus be reprinted and up-dated.

Note

** In such issues, when the Issuing and Paying Agent (IPA) is notified by the Lead Manager that distribution is complete, the IPA will determine when the restricted period has expired and will then inform the necessary parties of that fact.*

PRICING SUPPLEMENTS

Pricing supplements should indicate whether or not the proposed issue is to involve a syndicate of managers. If a syndicate of managers is to be involved, the names of the managers should be set out in the pricing supplement.

DEBT INSTRUMENTS

RECOMMENDATION 1.15

CONDITIONS PRECEDENT

The following should be included as conditions to closing (unless managers have been notified, before they are required to agree to become managers, that they will not be):

- the delivery to the Lead Manager on behalf of all the managers of relevant and appropriate opinions from legal counsel (for example, from the country of incorporation of the issuer and guarantor, if there is one, and the country whose laws govern the notes to be issued) confirming (amongst other things) that the securities to be issued are (or will create) valid and binding rights and that the contracts relating to the issue and the rights of the managers under them are valid and binding;

- the delivery to the Lead Manager on behalf of all of the managers of appropriate comfort letter(s) from the auditor to the issuer (and any guarantor) dated the signing and closing date and addressed to the managers; and

- where the issue is under a Debt Programme, a certificate, signed by a director or other equivalent senior officer of the issuer (and any guarantor) to the following effect:

  [Insert reference to prospectus and any supplements] contain all material information relating to the assets and liabilities, financial position, profits and losses of [name of Issuer and Guarantor, if there is one] and nothing has happened or is expected to happen which

would require the attached documents to be supplemented or updated.

The auditors' first comfort letter (if there is one) should be dated the signing date for the issue and the legal opinion(s) and auditors' second (or only) comfort letter should be dated the closing date for the issue (unless managers have been notified, before they are required to agree to become managers, that they will not be).

DEBT INSTRUMENTS

RECOMMENDATION 1.16

ENFORCEMENT OF SECURITIES' HOLDERS' RIGHTS

The International Clearing Systems will not normally enforce the terms of securities against an issuer or guarantor on behalf of persons investing in such securities through accounts held with the clearing systems. It is therefore important for a Lead Manager to ensure that the persons ultimately entitled to the securities can enforce their rights under the securities against the issuer and, if there is one, the guarantor. In particular, special arrangements may be necessary in order to achieve this effect where the securities are represented by permanent global certificates.

DEBT INSTRUMENTS

RECOMMENDATION 1.17

NAME GIVE-UP

Other than in the case of pot deals (for which see Recommendation 1.20), the managers of an issue should not be required to divulge the names of any of their customers showing interest in the issue, or the level of interest, unless there are compelling reasons for doing so. Where such a requirement is imposed, the information should not be provided to, or through, any other manager of the issue, but should be given only by each manager to the issuer of the securities, on a confidential basis.

Under the laws of some countries such information may be regarded as being confidential and its disclosure may only be made with prior consent of the customer concerned.

Where such a requirement is to be imposed, managers should be notified of that fact no later than the time they are invited to participate in the issue. Such notification should contain full details of the information which must be disclosed and the reasons for the requirement.

DEBT INSTRUMENTS

RECOMMENDATION 1.18

LEAD COUNSEL TO MANAGERS/DEALERS

Neither the Managers of a syndicated issue nor the Dealers in a Debt Programme should be represented by a law firm which has any other conflicting interest in that transaction. The law firm which represents the Managers or the Dealers should not represent in any particular transaction any other party to the transaction (other than the trustee or its equivalent). In particular, it should not also represent the issuer or the guarantor, if any.

DEBT INSTRUMENTS

RECOMMENDATION 1.19

DAY COUNT FRACTION: USE OF ACTUAL/ACTUAL CONVENTION

All issues of fixed rate international bonds denominated in any currency other than US Dollars should use the actual/actual day count fraction for the determination of interest. (*Standard language for the actual/actual convention is contained in the ICMA Standard Documentation and Standard Language section of this Handbook.)*

This Recommendation applies to bonds issued after 1 January 2001. Bonds which are intended to be fungible with bonds which were launched prior to 2001 and used a different day count fraction should use the day count fraction used in the earlier issues.

DEBT INSTRUMENTS

RECOMMENDATION 1.20

POT DISTRIBUTION

Lead Managers should provide timely disclosure of whether a new issue will be launched as a Pot deal, in accordance with Recommendation 1.1 which requires early disclosure of the "basic commercial terms" of an issue. If it is a Pot deal, potential syndicate members should be given complete information about the proposed Pot structure at the earliest opportunity, which may be prior to the formal launch of the issue. Lead Managers are encouraged to include relevant information on Bloomberg. Disclosure should also be made prominently in the formal invitation for the issue (including the Bookrunner system invitation, and the Invitation to Managers.)

The following information should be provided, and any other features of the Pot structure should be described clearly.

- the percentage of the issue to be distributed through the Pot;
- who will manage the Pot: the Issuer or the Bookrunner/s;
- whether co-lead or co-managers will receive any allotment (retention bonds) and if so, the relevant percentage of the issue;
- whether there is a selling group and, if so, the selling group mechanics;
- if there is a strategic reserve for the co-lead and/or co-managers managed by the Issuer this should be stated, with the percentage of the issue;

- if there is a flexi-pot/incentive pot or similar for the co-lead and/or co-managers managed by the Bookrunner/s this should be stated, with the percentage of the issue;

- any requirements relating to name give up;

- the fees payable to managers and how they will be allocated (e.g. fixed economics; fees on retention bonds; and any strategic reserve/flexi-pot/incentive pot fees);

- the name of the manager who will pay the fees.

ICMA Recommendations 1.3, 1.4, and Recommendation 1.17 do not apply to issues distributed through a Pot, except that Recommendation 1.17 (Name Give up) continues to apply to any allotment of retention bonds. The Bookrunner system invitation and the Invitation to Managers do not need to disapply these Recommendations. ICMA Recommendation 1.2 (Timing of Allotments) applies if Pot bonds not allocated to investors are to be allocated to managers.

Fees payable to managers and selling group members should be paid on the closing date.

DEBT INSTRUMENTS

RECOMMENDATION 1.21

GLOBAL BOND ISSUES

For the purpose of this Recommendation, 'global bond issue' means a US SEC registered issue, or an issue by an issuer, such as a supranational agency, which is not required to register with the SEC, in each case where such issue is intended to be distributed both in and outside the United States.

A. US DOLLAR GLOBAL BONDS

US Dollar global bonds follow US market practice. ICMA Recommendations (other than this section A) only apply to US Dollar global bonds to the extent that Lead Managers of such bonds elect to apply them, and so inform syndicate members when they are invited to join the issue.

ICMA Members whose US affiliates are lead managing a US Dollar global bond issue should assist other ICMA Members in the syndicate if asked to do so, by providing contact details of the persons involved at their US affiliate, and, if known to the ICMA Member, contact information for underwriters'/managers' counsel.

B. NON-US DOLLAR GLOBAL BONDS

ICMA Recommendations apply to non-US Dollar global bonds with the following amendments:

1. In accordance with Recommendation 1.1, Lead Managers must advise all invited parties at the earliest possible moment of the basic commercial and non-commercial terms of an issue, and in any event before they are required to accept the invitation to participate. Lead Managers may send a comprehensive Invitation to Managers, but are not required to do so, if they have complied with the general requirements of this provision in another way. At a minimum, Lead Managers are encouraged to send to potential co-managers a 'short form' invitation, including details of fees, underwriting commitments, timetable, whether or not the issue will be listed and, if so, its expected listing date, and a form of acceptance and power of attorney. (Lead Managers are reminded that ICMA standard forms of Agreement Among Managers assume an invitation is issued). Once a co-manager has accepted its invitation, commitments may only be withdrawn if there are changes in or additions to the basic commercial or non-commercial terms of the issue, whether in the agreements or otherwise. Lead Managers should send settlement information to co-managers who accept the invitation as soon as it is available.

2. If it is not possible to give syndicate members two full business days to review documentation for global bond issues as required by Recommendation 1.5, Lead Managers should send the following documents to syndicate participants as soon as possible: a copy of the Base Prospectus or Programme documentation, any draft Prospectus Supplement, draft Pricing Supplement, draft Underwriting/Terms or Subscription Agreement and, if an ICMA standard form of Agreement Among Managers is not being used, any Agreement Among Underwriters which the co-manager will be expected to sign, including any Master Agreement Among Underwriters. Lead Managers are expected to make best efforts to give syndicate members sufficient time to review a draft Underwriting/Terms or Subscription Agreement, draft Pricing Supplement, any deal specific Agreement Among Managers and any Prospectus Supplement before they are expected to deliver their power of attorney or otherwise sign the Underwriting/Terms or Subscription Agreement. Lead Managers who use an ICMA

standard form Agreement Among Managers are reminded that amendments may be required if the issue in question is being underwritten on a several, not joint and several, basis.

ICMA Members whose US affiliates are lead managing a non-US Dollar global bond issue should assist other ICMA Members in the syndicate if asked to do so, by providing contact details of the persons involved at their US affiliate, and, if known to the ICMA Member, contact information for underwriters'/managers' counsel.

C. GLOBAL BONDS WITH US DOLLAR AND NON-US DOLLAR TRANCHE

It is recognised that it may not be feasible or practical to adopt different syndicate practices and fee structures for 2 tranches of the same issue, if one of the tranches is in US Dollars. In such a case, Lead Managers must state clearly which practices and fee structures are being followed when co-managers are invited to join the syndicate.

DEBT INSTRUMENTS

RECOMMENDATION 1.22

TIMELY ANNOUNCEMENTS TO SYNDICATES AND SELLING GROUPS

BREAKING OF SYNDICATE

At any time – and even a very short time – before the breaking of the syndicate, the Lead Manager should inform the management/selling group of the precise time when the breaking of the syndicate will occur. The Lead Manager can inform the management/selling group by screen, telephone or e-mail. Once the syndicate has been broken, the securities may be sold other than on the fixed price offer/re-offer basis.

PRICING

When the issue price is determined after launch by reference to the yield of an existing security, the Lead Manager is expected to inform the management/selling group in good time at what time and on what basis the issue will be priced. The Lead Manager should disclose any material change to the intended timing or basis promptly, and should tell the management/selling group immediately the issue price is determined.

DEBT INSTRUMENTS

RECOMMENDATION 1.23

SOVEREIGN ISSUER COLLECTIVE ACTION CLAUSES

Lead Managers of debt issues of sovereign issuers should state clearly in the Invitation to Managers if the issue will include ICMA standard Collective Action Clauses, and whether the issue will include financial or other information covenants.

For the purpose of this Recommendation, 'sovereign' includes Central Banks, but does not include 'sub-sovereign' issuers, such as regional and local authorities and municipalities, or sovereign-guaranteed issuers.

DEBT INSTRUMENTS

RECOMMENDATION 1.24

INTERNATIONAL OFFERINGS OF DOMESTIC DEBT SECURITIES

Procedures, practices and terms and conditions which apply to securities issued in accordance with the requirements of an issuer's 'home' market ('domestic securities') may differ in a number of respects from those which typically apply to cross-border offerings placed by ICMA Members with international investors ('international offerings').

ICMA Members who lead manage issues of domestic securities ('ICMA Lead Managers'), which are offered or sold to international investors, should consider these differences when marketing and launching such a new issue of securities. Early disclosure of the basic commercial and non-commercial terms of the issue in accordance with ICMA Recommendation 1.1 is essential to ensure that managers have sufficient information to know that they are being invited to join an issue of domestic securities, and to be aware of key features of the issue, which differ from those customary in international offerings, including any practical consequences, such as any tax certification requirements. If an issuer issues both domestic and 'international' securities to international investors, it is important that managers know which type of security is being issued.

It is not possible to specify a complete list of items which may need to be disclosed, or the level of detail which may be appropriate, as the circumstances of each issue and market, and the level of

managers' familiarity with the particular product will differ. Further examples could include reference to relevant legislation if rights and obligations for a particular issue of domestic securities are set out in domestic law and regulation, rather than in an issue-specific set of terms and conditions (for example, cedulas in Spain), lack of standard features such as a negative pledge or tax gross-up, local language documentation, unusual (or no) events of default, local governing law, new issue settlement arrangements or timing of the offering, affecting the managers, which differ from those which apply to new issues settling in Clearstream and Euroclear, non-ICMA force majeure arrangements, and any stabilisation and marketing restrictions.

ICMA Lead Managers of international offerings of domestic securities are expected to comply with ICMA Recommendations to the extent practical.

DEBT INSTRUMENTS

RECOMMENDATION 1.25

STABILISATION

A. SCOPE OF THE RECOMMENDATION

This Recommendation applies to stabilisation of new issues of debt and equity-linked securities (1) which are to be admitted to trading on an EEA regulated market and stabilised in accordance with the requirements of the EU Market Abuse Directive (2003/6/EC), and its implementing Regulation EC 2273/2003 (the Regulation), (2) which are to be admitted to trading on the Professional Securities Market, operated by the London Stock Exchange, and (3) to stabilisation of any other securities to be stabilised in accordance with MAR 2.4 of the Code of Market Conduct of the UK Financial Services Authority. It addresses only the practical arrangements between stabilising managers within a syndicate for dealing with the announcement and reporting requirements of the Regulation and MAR 2.4, including the appointment of a Co-ordinating Stabilising Manager. It does not apply to any other requirements, including any which apply under national legislation relating to stabilisation, other than in the UK. It does not constitute legal advice.

B. INTRODUCTION

1. Securities to be admitted to trading on an EEA regulated market

There are three conditions for availability of the Regulation safe harbour:

(1) there has been an application for admission to trading of the securities on the regulated market;

(2) there has been *adequate public disclosure* of certain information about the terms of the offer of the securities (Article 8(4) and 8(5));

(3) there has been *adequate public disclosure* of certain information about the nature of the stabilisation (Article 9(1)). (This condition does not apply if at the time of the offer to investors, the issuer has already published a prospectus which has been approved under the Prospectus Directive in relation to those securities).

Once within the safe harbour, various recording and reporting requirements arise under Article 9(2), 9(3), 9(4) and 9(5). In addition, there are conditions that apply with respect to overallotments and greenshoe options under Article 11.

In addition, where the conditions in (2) and (3) are satisfied, this will satisfy the conditions for stabilisation under the safe harbour contained in the FSA's Code of Market Conduct (MAR 2.4) even if the condition in (1) has not yet been satisfied in relation to the transaction.

2. Securities to be admitted to trading on the Professional Securities Market operated by the London Stock Exchange, or which are otherwise stabilised in accordance with MAR 2.4 of the FSA's Code of Market Conduct

The rules which apply to stabilisation activity in the UK with respect to securities for which no application for admission to trading on an EEA regulated market has been made, including securities to be admitted to the Professional Securities Market, are set out in the FSA's Code of Market Conduct (MAR 2.4), which applies the Regulation, subject to the modifications set out in MAR 2.4.

C. APPOINTMENT OF A CO-ORDINATING STABILISING MANAGER

Unless otherwise notified to the Stabilising Manager(s) before the start of the stabilisation period, the Co-ordinating Stabilising Manager is the Lead Manager of the issue, in the case of a sole-lead managed issue, or, otherwise, the Joint Bookrunner named as Co-ordinating Stabilising Manager on ICMA terms in the relevant screen invitation, or other invitation to syndicate members. By naming itself in the relevant invitation as the Co-ordinating Stabilising Manager on ICMA terms, the relevant Lead Manager or Joint Bookrunner will be deemed to have agreed to its appointment on the terms that it will comply with paragraphs D, (or E) and G of this Recommendation.

D. ROLE OF THE CO-ORDINATING STABILISING MANAGER FOR SECURITIES TO BE ADMITTED TO TRADING ON AN EEA REGULATED MARKET

Unless otherwise notified to the Stabilising Manager(s) before the start of the stabilisation period, the role of the Co-ordinating Stabilising Manager is:

(1) to check that application for admission to trading on the relevant market has been made;

(2) to make (or to procure that the issuer makes) *adequate public disclosure* of the terms of the offer of the securities in accordance with Article 8(4) or 8(5) as relevant;

(3) to make (or to procure that the issuer makes) *adequate public disclosure* of the information about stabilisation specified in Article 9(1), if applicable;

(4) to make (or to procure that the issuer makes) *adequate public disclosure* of information about stabilisation activity in accordance with Article 9(3);

(5) to act as the central point of enquiry for any request from the relevant competent authority in accordance with Article 9(5);

(6) to make (or procure that the issuer makes) disclosure to the public of the exercise of any greenshoe option in accordance with Article 11(f); and

(7) to provide copies of stabilisation announcements to the other Stabilising Managers on request.

E. ROLE OF CO-ORDINATING STABILISING MANAGER FOR SECURITIES ADMITTED TO THE PROFESSIONAL SECURITIES MARKET OPERATED BY THE LONDON STOCK EXCHANGE OR WHICH ARE OTHERWISE TO BE STABILISED IN ACCORDANCE WITH MAR 2.4 OF THE FSA'S CODE OF MARKET CONDUCT

(1) to disclose in a screen-based announcement the fact that stabilisation may take place ('stabilisation/FSA'), or in some other manner which provides *adequate public disclosure* (MAR 2.4.4 (1) (a));

(2) to act as a central point of enquiry for the FSA in accordance with Article 9(5) of the Regulation; and

(3) to make (or procure that the issuer makes) disclosure to the public of the exercise of any greenshoe option in accordance with Article 11(f).

F. APPOINTMENT AND ROLE OF OTHER STABILISING MANAGER(S)

Syndicate members should only stabilise securities in an offering if appointed as Stabilising Manager(s) by the Co-ordinating Stabilising Manager. The relevant invitation should state the name(s) of the Stabilising Manager(s) and specify ICMA terms. By accepting the invitation, the manager concerned will be deemed

also to have accepted its appointment as Stabilising Manager on the terms that it will comply with paragraphs F and G of this Recommendation. Each Stabilising Manager is responsible for notifying its stabilising transactions to the relevant competent authority in accordance with Article 9(2) of the Regulation, if the securities are to be admitted to an EEA regulated market, and for complying with the record-keeping requirements of Article 9(4) of the Regulation (or MAR 2.4.5 R (4) if relevant).

Each Stabilising Manager must provide to the Co-ordinating Stabilising Manager the information necessary to enable the Co-ordinating Stabilising Manager to comply with Article 9(3) of the Regulation (when applicable) and such information as the relevant competent authority may require to be provided by that Stabilising Manager in relation to its stabilisation activity, pursuant to Article 9(5) of the Regulation.

G. COMPLIANCE WITH APPLICABLE LAWS

The Co-ordinating Stabilising Manager and the other Stabilising Managers should comply with applicable laws and regulations in relation to their respective stabilisation activities and should cooperate with a view to ensuring that there is adequate co-ordination of their respective stabilisation activities. They should each maintain the records required by Article 9(4) of the Regulation (or MAR 2.4.5 R (4) if relevant) for such period as shall be required by applicable law or regulation, from the end of the stabilising period.

DEBT INSTRUMENTS

RECOMMENDATION 1.26

INCLUDING THE DATE OF BASE PROSPECTUS IN SCREEN ANNOUNCEMENTS

For issues under Medium Term Note Programmes, the Lead Manager should include in the relevant screen or Bloomberg announcement the date of the base prospectus (or supplement) which contains the terms and conditions of notes issued under the programme that apply to the issue being launched.

DEBT INSTRUMENTS

RECOMMENDATION 1.27

AVAILABILITY OF DRAFT OFFERING DOCUMENTATION

This Recommendation applies to institutional offerings of securities by issuers that have not previously issued in the European markets.

The final draft (red herring) of the prospectus should be made available to investors invited to participate in the issue at least three days before pricing of the issue, subject to applicable law.

DEBT INSTRUMENTS

RECOMMENDATION 1.28

AVAILABILITY OF PROSPECTUS

This Recommendation applies to institutional offerings of securities.

Each member of the syndicate should make available the final prospectus and/or the final terms or pricing supplement to each investor to whom it sold a portion of a new issue of securities.

DEBT INSTRUMENTS

RECOMMENDATION 1.29

RELATIONSHIP BETWEEN LEAD MANAGERS AND MANAGERS

The Lead Manager should ask for the relevant Joint Lead Manager's or Manager's consent before disclosing to an issuer the name of the relevant Joint Lead Manager or Manager who has given a particular comment on the documentation to the Lead Manager or counsel for the Managers.

DEBT INSTRUMENTS

RECOMMENDATION 1.30

PRE-SOUNDING OF TRANSACTIONS

For the purpose of this Recommendation, "pre-sounding" means discussions, prior to any public announcement, with selected third parties to gauge market appetite for a potential structure, transaction and/or pricing. This may involve disclosure, to such third parties, of non-public price-sensitive information.

Those syndicate members (e.g. Bookrunners and Lead Managers) intending to conduct pre-sounding should, prior to conducting such pre-sounding, discuss together:

- what information is proposed to be disclosed in the course of such pre-sounding;
- whether such information is to be treated as 'inside information' under applicable market abuse rules; and
- what procedures such syndicate members will apply, in managing the disclosure of such information (including as to potential subsequent 'cleansing' of 'stale' information), to ensure compliance with such rules.

DEBT INSTRUMENTS

RECOMMENDATION 1.31

JOINT LEADS WITHOUT RESPONSIBILITY FOR THE ORDER BOOK

ACCESS TO DISTRIBUTION

The joint lead manager(s) appointed to actively run the order book for a transaction ('active' bookrunner(s)) should give any other joint lead manager without responsibility for actively running the order book for that transaction access to the detailed distribution data for the transaction by close of business on the business day following pricing of the transaction.

INVITATION TO JOIN TRANSACTIONS

The appointment of active bookrunners may happen earlier than the appointment of other joint lead managers.

Where possible, such other joint lead managers should be:

- notified of their appointment in sufficient time prior to announcement of the transaction, to allow them to familiarise themselves with the proposed transaction and related documentation; and
- invited to participate in any transaction due diligence calls.

Bookrunners should explain the rationale for this to issuers.

DEBT INSTRUMENTS

RECOMMENDATION 1.32

NEW ISSUE PROCESSES

1. Orderbooks should be kept open for a minimum of 60 minutes, unless otherwise agreed with the issuer.

2. Notwithstanding prior publication of any offering materials (notably programme prospectuses), direct access to such materials should be arranged, as soon as practicable, for investors placing orders.

3. Any disclosure of investor demand and (bearing in mind ICMA Press Statement 1) any disclosure of distribution should be agreed by the active bookrunners in advance of being effected.

4. Any tentative pricing information, disseminated between the announcement of a transaction and the opening of orderbooks (and related issuance of formal price guidance), should be referred to as "initial price talk".

5. Any dissemination of the scheduling of investor meetings in relation to potential issuance by less frequent issuers, or of initial price talk or of investor demand should occur on a public basis, whether or not required under applicable law or regulation.

Background information on new issue processes (including some aspects related to the above) is set out in ICMA Explanatory Note XIII.

This Recommendation does not replace any requirements of law or regulation.

April 2012

SECTION TWO

RECOMMENDATIONS APPLICABLE TO OFFERINGS OF EQUITY AND EQUITY-LINKED DEBT ISSUES

NOTES APPLICABLE TO ALL RECOMMENDATIONS IN SECTION TWO

1. Whenever the term *Lead Manager* is used, this is presumed to be the bookrunner or, where there is a number of bookrunners, the global co-ordinator.

2. In the Recommendations in Section Two, *manager* means any person who assumes an obligation towards the issuer of the securities or the owner of the securities which are to be the subject of the offering, to subscribe or purchase, or procure subscribers or purchasers, for the securities.

3. Recommendation 2.2 and Part 2 of Section Two, Schedule 2 only apply where the issuer of the shares in question is incorporated outside a Specified Jurisdiction. Recommendation 2.2 and Part 1 of Section Two, Schedule 2 apply in *all* cases. For this purpose, *Specified Jurisdiction* means any Member State of the European Union or of the European Free Trade Association, Canada, any State of the United States of America, Japan, Australia and New Zealand.

4. ICMA's Members acting as Lead Managers in issues or offerings of Euro-securities as defined in the EC Prospectus Directive (89/298/EEC) will be presumed – unless and to the extent that the contrary is stated on the screen, telephone invitation and the invitation telex – to be applying ICMA Recommendations to the issue or offering (unless disapplied already, under paragraph 3 above).

For issues or offerings launched in other circumstances, the Lead Manager should either state on the screen, telephone invitation and the invitation telex that ICMA Recommendations are applicable if

that is the case or, if some but not all of ICMA Recommendations are to be applicable, this fact, together with an indication of which Recommendations are excluded, should be similarly stated.

The definition in the Prospectus Directive is as follows:

> *"Euro-securities" shall mean transferable securities which:*
>
> – *are to be underwritten and distributed by a syndicate at least two of the members of which have their registered offices in different States, and*
>
> – *are offered on a significant scale in one or more States other than that of the issuer's registered office, and*
>
> – *may be subscribed for or initially acquired only through a credit institution or other financial institution.*

5. The Recommendations in this Section Two apply to offerings of shares, whether on issue or where the shares being offered have already been issued, including offerings of investments (such as depositary receipts) which represent shares. Recommendation 2.1 also applies to bonds convertible into, exchangeable for or redeemable in, or bonds with warrants exercisable into, shares.

6. Whenever the term *equity* is used, it includes shares of any description, whether or not voting rights or dividend rights are restricted.

EQUITY

RECOMMENDATION 2.1

SYNDICATE INFORMATION

1. In order to ensure productive and fair operation of the syndicate, the Lead Manager should provide, and prospective managers should expect to receive, a detailed outline of the basis of the invitation. The information should allow the prospective manager to assess and understand:

- the role which it is being asked to perform;
- the research and/or trading resources which are necessary/ appropriate to performance of the role;
- the expected underwriting and/or other market-related risk involved (for example, whether there is to be book-building or whether the underwriting is hard);
- the mechanism by which it will be remunerated including the anticipated commission;
- the marketing arrangements including the managers' access to investors and the roadshow within geographical regions;
- risk period, if known.

It is recommended that the transaction information relating to an invitation to participate as a manager is contained in a syndicate memorandum. This memorandum should be made available at, or as soon as possible after, the initial invitation into a syndicate and before any significant commitment of resources by the prospective manager.

To assist Lead Managers, a check-list of information to be considered for inclusion in the memorandum is attached (Section Two, Schedule 1). The items are neither exhaustive nor mandatory. Where items of information are unavailable until a later stage in the transaction, it will be helpful not only to note this but also to give to syndicate members an indication of when they can expect such information to be forthcoming.

2. Section Two, Schedule 2 contains a check-list of information which may be relevant for disclosure to the syndicate at a later stage of the transaction for issues or offerings of equity.

3. Lead Managers should use the check-list in Part 1 of Section Two, Schedule 2 and (where the issuer of the shares in question is incorporated outside a Specified Jurisdiction) the check-list in Part 2 of Section Two, Schedule 2 when considering what information should be provided to managers or prospective managers subsequent to the issue of the syndicate memorandum and should (unless prevented from doing so by law or market practice) obtain and provide any such information to managers or prospective managers if so requested. For the avoidance of doubt, there is no requirement to include such information in any invitation telex. The information can be included in any draft prospectus for the issue or (unless there is a legal requirement to disclose the information in the prospectus) only on request by a manager.

4. Lead Managers are reminded that both the EC Prospectus Directive (89/298/EEC) and the Listing Particulars Directive (80/390/EEC) require that investors should be given the information which, according to the particular nature of the issuer and of the securities in question, is necessary to enable investors and their investment advisers to make an informed assessment of the assets and liabilities, financial position, profits and losses, and prospects of the issuer and of the rights attaching to the securities. Nothing in these Recommendations should be taken as in any way modifying this overriding obligation or the requirements of any stock exchange which may be relevant in connection with the offering.

5. If there are subsequent material changes in any information given under this Recommendation, such changes must be promptly notified to the person to whom such information was given.

EQUITY

RECOMMENDATION 2.2

EXECUTION OF AGREEMENTS

1. The Lead Manager must send to each of the managers the final version (subject to any subsequent modifications, which must be promptly notified to each of the managers) of the agreements required to be executed by them together with the latest draft of the prospectus or offering circular for receipt not later than three full business days prior to the signing.

2. Lead Managers requesting managers to appoint authorised signatories to execute agreements on their behalf, and managers in providing such appointments, should use the following form:

Quote

> We, [Name of your institution] hereby appoint [Name of your signatory] or [Names of Lead Managers' signatories] acting alone with power to execute and deliver on our behalf the [name of documents] in connection with the issue/sale by [Name of issuer or seller] of [description of securities being issued or sold] and to take any other action necessary in connection with such issue/sale.
>
> By: ..... Dated: .....
> *Authorised representative(s)*

Unquote

Note

It is recognised that adaptations to the above form may be required to be made by managers to reflect particular local or corporate requirements.

EQUITY

RECOMMENDATION 2.3

FEES AND LATE PAYMENT

1. The provisions of Recommendation 1.8 apply to all equity-linked debt instruments.

2. In all other issues, the Lead Manager should inform each of the managers, when invitations are issued, of:

- any limit (or the absence of any limit) on deduction for expense overruns;
- unusual cost overruns to be charged to the syndicate, i.e. those not referred to under Managers' Expenses in Appendix B(XI), and the procedures for calculating commissions if such overruns are charged;
- whether the expenses of any manager other than the Lead Manager are to be reimbursed by the Issuer;
- any cap on expenses to be reimbursed by the Issuer;
- if paragraph 4 or 5 of Recommendation 2.3 is to be dis-applied, the time limit for payment;
- any non-proportionate fee arrangements including inter-syndicate expense sharing arrangements which are not pro rata allocation.

3. The following "short form" reference may be used to indicate the limits, if any, on deduction from commissions:

ICMA1

Expense overruns and stabilisation costs may be deducted from the underwriting commission only.

ICMA2

Expense overruns and stabilisation costs may be deducted from the underwriting and management commissions only.

ICMA3

Expense overruns and stabilisation costs may be charged to syndicate members (whether by deduction or otherwise) without limit.

If "ICMA1" is used, it should be made clear from the information given which part of the overall fees will comprise underwriting commission and which part will comprise management commission.

4. Any selling commissions which are not deducted from settlement payments should be paid as soon after closing as the Lead Manager is able to calculate them and in any event no later than 30 days after the closing date.

5. Management and underwriting commissions should be paid to managers no later than 90 days and 150 days respectively after the closing date, after deduction only for items and subject to any limits on the overall deductions, notified to managers in accordance with paragraph 2.

6. The time limits for payment of commissions under paragraphs 4 and 5 shall not apply if the Lead Manager is able to demonstrate that it could not make such payment within such time limit. In any such case, payment must be made as soon as the Lead Manager is able to do so.

7. If any fees or commissions due to a manager have not been paid on the date on which they are due as set out in paragraphs 4 and 5, the Lead Manager should in addition pay interest of 1% per month or part thereof, such interest to be calculated from (but excluding) the date on which the fees are due and to be added to the amount on which interest is so calculated at the end of each period of 30 days thereafter. The interest rate of 1% per month shall apply to all currencies. It shall be added to the payment of the fees or commissions but identified separately. In case of dispute the Lead Manager may be asked by ICMA to provide evidence as to the dates when payments were effected.

8. In the event of any of the commission payments being delayed beyond the above timetable, managers and the Issuer should be promptly informed in writing of the reasons for the delay and envisaged future timetable for payment.

9. Lead Managers should separately categorise stabilisation and cost overruns and be prepared to indicate upon request the breakdown between legal, marketing and other expenses.

10. When supplemental selling concessions are required to be paid to managers as a result of the triggering of a cap on the selling or total economics of the Lead Manager it should be made clear to a manager the amount of such concession which is the result of reallocation of selling concessions and the calculations by which reallocation has been determined should be clearly set out in writing.

EQUITY

RECOMMENDATION 2.4

CONDITIONS PRECEDENT

The following should be included as conditions to closing (unless managers have been notified, before they are required to agree to become managers, that they will not be):

- the shares will be listed (or will be listed shortly after closing) on the exchange notified to the managers in accordance with the Recommendation 2.1 and Part 1 of Section Two, Schedule 2;

- an appropriate opinion from legal counsel confirming that the shares have been (or that there is no legal reason why they should not be) issued and are (or will create) valid and binding rights and that the contracts relating to the issue and the rights of the managers under them are valid and binding.

EQUITY

RECOMMENDATION 2.5

STABILISATION

1. The Lead Manager should inform each of the managers, when invitations are issued:

- whether any stabilisation is to be carried out in the shares or other shares connected with them (e.g. *associated securities* for FSA rule purposes);
- whether stabilisation is to be carried out for the account of the managers;
- if so, whether the liability of the managers is subject to a limit and whether there is a limit on the number of shares which can be stabilised;
- details of the period during which stabilisation will or may be carried out.

2. Where stabilisation is to be carried out by the Lead Manager as agent for the managers, the Lead Manager should account to the managers for any interest earned by it on any moneys earned through stabilisation while acting as agent and for any such moneys, unless it is authorised by the managers to retain all or part of such interest or profits, and should notify them on invitation of any deductions to be made from any stabilisation profits before payment to the managers.

EQUITY

RECOMMENDATION 2.6

ORDER CLARIFICATION

When any order enters a book through another manager or is split in part with a manager other than the Lead Manager, the Lead Manager should inform the manager in question in advance of any contact by the Lead Manager with the institution placing the order for the purpose of clarifying the order. In the event that Lead Managers wish to derogate from this Recommendation, this should be expressly stated as "non ICMA order clarification" in the syndicate memorandum.

SCHEDULE 1

ICMA SYNDICATE MEMORANDUM CHECK-LIST FOR ISSUES OR OFFERINGS OF EQUITY OR EQUITY-LINKED INSTRUMENTS

Note

Schedule 2 contains a more detailed check-list amplifying many of the bullet points set out below. While it is not intended that the Syndicate Memorandum should contain information in such detail, Schedule 2 may assist in identifying information which should be disclosed in summary form in the Syndicate Memorandum, to the extent that such information is available at the time the Syndicate Memorandum is to be published. In the check-list below, where it is felt that Schedule 2 might be of assistance, a note of the relevant paragraph appears after the bullet point concerned.

1. Structure of Offering and Syndicate

- Description of offering and of securities (sch.2, para.1)
- Fungibility, dividend entitlement (sch.2, paras 1.13 and 1.21 to 1.28)
- Description of shareholding structure pre and post issue (sch.2, para.2)
- Syndicate structure (sch.2, para.3)
- 144A arrangements (sch.2, para.4)
- Greenshoe (sch.2, para 5)
- Clawback between syndicates (sch.2, para 6)
- Re-allocation of underwriting between syndicates
- Pricing mechanics, including underwriting range
- Protection policy
- Stabilisation
- Listings
- Tranche structure
- Nature, size-range and timeframe for underwriting
- Full timetable (sch.2, para 7)
- Any lock-up on further sales/new issues (sch.2, para 2.7)

2. Sales Restrictions

- Local
- USA
- Japan
- International/other
- Ringfencing
- Exempt lists
- Any public offer jurisdictions

3. Commissions and Expenses

- Gross
- Super praecipuum
- Management fee
- Management praecipuum
- Underwriting fee
- Selling concession
- Pot economics
  - Caps: how calculated, what happens if exceeded
  - Pre-agreed: how calculated
- Designations: whether permitted, before or after allocation
- Deductions (ICMA1, ICMA2 or ICMA3)
- Expense reimbursement
  - Full details on expenses including who is responsible for paying which expenses and whether a cap applies. Policy for reimbursing expense
- Commissions on greenshoe
- Timing of payments
- Any issuer discretionary payments
- Any issuer sanctions
- Intersyndicate arrangements for
  - expense overruns
  - stabilisation costs

4. Documentation

- When available
- Force majeure
- Inclusion of managers' names on prospectus cover

5. Trading arrangements

- Which market
- Restrictions
- Obligations
- Persons expected to make markets
- Start date

6. Research

- Who can publish and when
- Who is required to publish research
- Co-ordination of contents
- Arrangements for company access
- Window period
- Blackout period (beginning and ending)
  - US
  - International
- Research guidelines memo

7. Marketing Arrangements

- Marketing schedule/timetable
- Role and responsibilities of syndicate members in
- Pre-marketing procedures
  - Timing
  - Feedback
  - Restrictions
- Roadshow
  - Access to management presentations
  - Access to management one-on-ones

8. Bookbuild/demand procedures

- Communication methodology (especially if multiple book-runner)
- Transparency and confidentiality
- Investor details required
- Pot mechanics
- Disclosure of book - to whom and when
- Split orders

- Order clarification policy
- Designation policy
- Timing and mechanics of designations

9. Allocation and settlement

- Determined by whom
- Protection
- Criteria
- Pot orders – billing and delivery
- Treatment of non-transparent or retail orders
- Free retention/directed allocation policy
- Split orders
- Disclosure of allocations/pot list - to whom and when
- Settlement mechanics (where unusual)
- Name of settlement contact person

10. Publicity

- Restrictions

11. Contact list

- Bookrunner/GC contacts

12. Forms

- Pre-marketing forms
- Investor demand forms

13. Due Diligence and Legal

- Legal advisors to
  - Company
  - Vendor (if applicable)
  - Underwriters
- Availability of 10b-5 opinions to underwriters and from whom
- Accounting Advisers
- Comfort letters (SAS 72, SAS 76, Other)
- Other technical advisers

SCHEDULE 2

ICMA DISCLOSURE CHECK-LIST FOR ISSUES OR OFFERINGS OF EQUITY OR EQUITY-LINKED INSTRUMENTS

PART 1

Information to be disclosed by the Lead Manager in all issues of shares or equity-linked debt issues

Structure of Offering and Syndicate

1 Description of offering and of securities

Offering

1.1 whether a primary or secondary offering or IPO

1.2 any concurrent domestic or other regional offerings of the shares or at other shares

1.3 any reservation of geographical areas to any manager or group of managers with description of the areas so reserved

1.4 any restrictions on grey market trading

1.5 any restrictions on trading between securities involved in the issue (e.g. between ADAs and GDRs and the shares)

1.6 any force majeure arrangement (including whether an ICMA version is to be used and, if so, which)

1.7 governing law of offering

1.8 use of proceeds

Securities

1.9 type of shares (e.g. equity of preference shares)

1.10 form of shares (e.g. bearer/registered physical/dematerialised)

1.11 whether the shares are to be represented by collective certificates or receipts (e.g. ADRs or GDRs)

1.12 par value

1.13 whether the shares are fungible with existing shares or will become so (and if so, when)

1.14 voting entitlement (including, if the voting rights are different from those of any other class of shares, details of the differences)

1.15 any obligations to contribute over and above the subscription price (whether under the constitution of the issuer or under the law) (e.g. if the shares are partly paid or the liability of shareholders is not strictly limited to the amount paid up on their shares)

1.16 redemption rights attached to the shares, if any

1.17 description of any conversion rights attached to the securities

1.18 any stock exchange on which the shares are listed

1.19 any identification symbol for the shares used by any relevant stock exchange or quotation system

1.20 if prospective investors would be entitled to pre-emption rights in respect of further share issues, a description of those rights

Dividend entitlement and history; tax

1.21 dividend entitlement (including, if the shares are preferential, whether the right is cumulative and, if the dividend is variable, the basis on which it is determined)

1.22 expected dividend payment date and the expected record date for determining entitlement to dividends

1.23 current dividend yield (if the shares are listed)

1.24 dividend history over previous five years (or for as many years as possible, if five years is impracticable)

1.25 Dividends paid over previous two years or last five occasions on which dividends have been paid, if they have not been paid annually

1.26 any withholding tax on dividends

1.27 any other tax which might apply to transactions in the shares (e.g. capital gains on disposals)

Price and trading history

1.28 price details (monthly highs and lows) over previous two years and the current year (including daily figures for a 15-day period ending not earlier than three days prior to invitation)

1.29 average daily volume of trading over a period of 12 months

2 Description of shareholding structure pre and post issue

2.1 Recent share issues or issues of equity-linked securities by the issuer in the previous five years, with brief description of each class of shares concerned

2.2 details of changes to the share capital of the issuer for all classes of share including share splits and rights issues over the previous five years (or, if this period is not possible, for the longest period which is possible)

2.3 Percentage of share capital represented by the issue (assuming shares are fully issued) and number of shares that will be outstanding upon completion of the issue

2.4 dilution in terms of EPS

2.5 in the case of a secondary offering, details of the identity of the vendor

2.6 if it is important that any existing shareholder retains its stake in the issuer, a description of the arrangements made to achieve this (e.g. a "no-sale agreement" or "lock-up" arrangement)

2.7 any restriction on the right of the issuer or the offeror to sell further shares or to convert any convertible securities or to exchange any warrants for shares for any period from the launch of the issue, including details of end of the period

2.8 issuer's power to purchase and hold its own shares

2.9 any legal requirement to notify shareholdings (or agreements to acquire shares, such as underwriting commitments) above a certain level to the issuer or any authority

2.10 any "golden share" arrangements

2.11 major shareholders or the absence of any major shareholders, including connected groups of people, if their shareholdings are material in the context of the issue or offering and whether they hold for investment or as dealers

3 Syndicate structure

3.1 Composition of management group and structure (e.g. Lead Managers, co-managers, regional Lead Managers etc.)

3.2 the identity of the persons who will determine the price and the basis on which they will do so

3.3 whether a manager may be required to subscribe or purchase shares

4 144A arrangements

4.1 Who can sell in United States of America under Rule 144A

5 Greenshoe

5.1 Number of additional securities which can be issued under the greenshoe

5.2 period within which greenshoe can be exercised and person who can exercise

6 Clawback between syndicates

6.1 Description of maximum amount of any clawback and/or "flow-through" arrangements

6.2 period within which clawback can be exercised

7 Full timetable

Timetable, including details of:

7.1 the expected date on which the offering will be priced;

7.2 the time (if any) at which the managers will become legally bound to subscribe or purchase or to procure subscribers or purchasers;

7.3 the time at which managers will have securities allotted to them;

7.4 expected closing date;

7.5 when listing will be granted (if any);

7.6 first expected day of trading of shares being offered (if they are listed);

7.7 expected timing of settlement;

7.8 mechanics for settlement;

7.9 any notification requirement;

7.10 any “on exchange” requirement;

7.11 fees payable (e.g. brokers);

7.12 expected timing for delivery of certificates, if any.

PART 2

Additional information to be disclosed by the Lead Manager in all issues of shares or share-linked debt issues where the issuer is incorporated outside a Specified Jurisdiction

1. The market

1.1 any factors relating to the stock exchange on which the shares are listed which could make it difficult to dispose of the shares (e.g. any illiquidity). If there is a very low trading volume on the exchange, details should be given of average daily turnover on the exchange over a 12-month period;

1.2 any limit imposed by the relevant stock exchange outside which shares cannot trade on a given day;

1.3 details of locations where shares trade and methods by which prices can be obtained (e.g. screen-based systems).

2. Additional costs

2.1 any additional costs (e.g. stamp duty, transfer tax or registration fees) payable on subscription, purchase or subsequent transfer of shares.

3. Additional settlement transfer information

3.1 authorisations required for acquisition, transfer or sale of shares;

3.2 any limits on (a) total and (b) individual foreign ownership;

3.3 any requirement to be satisfied in respect of the holding of the shares (e.g. any requirement to register as an investor and hold an identity card and to appoint a domestic agent to receive corporate notices);

3.4 exchange control or other limitations on remission of payments in respect of the shares to investors (e.g. non-convertible currency).

SECTION THREE

RECOMMENDATIONS APPLICABLE TO ISSUES OF EQUITY-LINKED DEBT INSTRUMENTS

This section is currently being revised.

EQUITY-LINKED DEBT INSTRUMENTS

RECOMMENDATION 3.1

STABILISATION

A. SCOPE OF THE RECOMMENDATION

This Recommendation applies to stabilisation of new issues of debt and equity-linked securities (1) which are to be admitted to trading on an EEA regulated market and stabilised in accordance with the requirements of the EU Market Abuse Directive (2003/6/EC), and its implementing Regulation EC 2273/2003 (the Regulation), (2) which are to be admitted to trading on the Professional Securities Market, operated by the London Stock Exchange, and (3) to stabilisation of any other securities to be stabilised in accordance with MAR 2.4 of the Code of Market Conduct of the UK Financial Services Authority. It addresses only the practical arrangements between stabilising managers within a syndicate for dealing with the announcement and reporting requirements of the Regulation and MAR 2.4, including the appointment of a Co-ordinating Stabilising Manager. It does not apply to any other requirements, including any which apply under national legislation relating to stabilisation, other than in the UK. It does not constitute legal advice.

B. INTRODUCTION

1. Securities to be admitted to trading on an EEA regulated market

There are three conditions for availability of the Regulation safe harbour:

(1) there has been an application for admission to trading of the securities on the regulated market;

(2) there has been *adequate public disclosure* of certain information about the terms of the offer of the securities (Article 8(4) and 8(5));

(3) there has been *adequate public disclosure* of certain information about the nature of the stabilisation (Article 9(1)). (This condition does not apply if at the time of the offer to investors, the issuer has already published a prospectus which has been approved under the Prospectus Directive in relation to those securities).

Once within the safe harbour, various recording and reporting requirements arise under Article 9(2), 9(3), 9(4) and 9(5). In addition, there are conditions that apply with respect to overallotments and greenshoe options under Article 11.

In addition, where the conditions in (2) and (3) are satisfied, this will satisfy the conditions for stabilisation under the safe harbour contained in the FSA's Code of Market Conduct (MAR 2.4) even if the condition in (1) has not yet been satisfied in relation to the transaction.

2. Securities to be admitted to trading on the Professional Securities Market operated by the London Stock Exchange, or which are otherwise stabilised in accordance with MAR 2.4 of the FSA's Code of Market Conduct

The rules which apply to stabilisation activity in the UK with respect to securities for which no application for admission to trading on an EEA regulated market has been made, including securities to be admitted to the Professional Securities Market, are set out in the FSA's Code of Market Conduct (MAR 2.4), which applies the Regulation, subject to the modifications set out in MAR 2.4.

C. APPOINTMENT OF A CO-ORDINATING STABILISING MANAGER

Unless otherwise notified to the Stabilising Manager(s) before the start of the stabilisation period, the Co-ordinating Stabilising Manager is the Lead Manager of the issue, in the case of a sole-lead managed issue, or, otherwise, the Joint Bookrunner named as Co-ordinating Stabilising Manager on ICMA terms in the relevant screen invitation, or other invitation to syndicate members. By naming itself in the relevant invitation as the Co-ordinating Stabilising Manager on ICMA terms, the relevant Lead Manager or Joint Bookrunner will be deemed to have agreed to its appointment on the terms that it will comply with paragraphs D, (or E) and G of this Recommendation.

D. ROLE OF THE CO-ORDINATING STABILISING MANAGER FOR SECURITIES TO BE ADMITTED TO TRADING ON AN EEA REGULATED MARKET

Unless otherwise notified to the Stabilising Manager(s) before the start of the stabilisation period, the role of the Co-ordinating Stabilising Manager is:

(1) to check that application for admission to trading on the relevant market has been made;

(2) to make (or to procure that the issuer makes) *adequate public disclosure* of the terms of the offer of the securities in accordance with Article 8(4) or 8(5) as relevant;

(3) to make (or to procure that the issuer makes) *adequate public disclosure* of the information about stabilisation specified in Article 9(1), if applicable;

(4) to make (or to procure that the issuer makes) *adequate public disclosure* of information about stabilisation activity in accordance with Article 9(3);

(5) to act as the central point of enquiry for any request from the relevant competent authority in accordance with Article 9(5);

(6) to make (or procure that the issuer makes) disclosure to the public of the exercise of any greenshoe option in accordance with Article 11(f); and

(7) to provide copies of stabilisation announcements to the other Stabilising Managers on request.

E. ROLE OF CO-ORDINATING STABILISING MANAGER FOR SECURITIES ADMITTED TO THE PROFESSIONAL SECURITIES MARKET OPERATED BY THE LONDON STOCK EXCHANGE OR WHICH ARE OTHERWISE TO BE STABILISED IN ACCORDANCE WITH MAR 2.4 OF THE FSA'S CODE OF MARKET CONDUCT

(1) to disclose in a screen-based announcement the fact that stabilisation may take place ('stabilisation/FSA'), or in some other manner which provides *adequate public disclosure* (MAR 2.4.4 (1) (a));

(2) to act as a central point of enquiry for the FSA in accordance with Article 9(5) of the Regulation; and

(3) to make (or procure that the issuer makes) disclosure to the public of the exercise of any greenshoe option in accordance with Article 11(f).

F. APPOINTMENT AND ROLE OF OTHER STABILISING MANAGER(S)

Syndicate members should only stabilise securities in an offering if appointed as Stabilising Manager(s) by the Co-ordinating Stabilising Manager. The relevant invitation should state the name(s) of the Stabilising Manager(s) and specify ICMA terms. By accepting the invitation, the manager concerned will be deemed

also to have accepted its appointment as Stabilising Manager on the terms that it will comply with paragraphs F and G of this Recommendation. Each Stabilising Manager is responsible for notifying its stabilising transactions to the relevant competent authority in accordance with Article 9(2) of the Regulation, if the securities are to be admitted to an EEA regulated market, and for complying with the record-keeping requirements of Article 9(4) of the Regulation (or MAR 2.4.5 R (4) if relevant).

Each Stabilising Manager must provide to the Co-ordinating Stabilising Manager the information necessary to enable the Co-ordinating Stabilising Manager to comply with Article 9(3) of the Regulation (when applicable) and such information as the relevant competent authority may require to be provided by that Stabilising Manager in relation to its stabilisation activity, pursuant to Article 9(5) of the Regulation.

G. COMPLIANCE WITH APPLICABLE LAWS

The Co-ordinating Stabilising Manager and the other Stabilising Managers should comply with applicable laws and regulations in relation to their respective stabilisation activities and should cooperate with a view to ensuring that there is adequate co-ordination of their respective stabilisation activities. They should each maintain the records required by Article 9(4) of the Regulation (or MAR 2.4.5 R (4) if relevant) for such period as shall be required by applicable law or regulation, from the end of the stabilising period.

SECTION FOUR

RECOMMENDATIONS AND GUIDANCE NOTES APPLICABLE TO MEDIUM TERM NOTE PROGRAMMES

NOTES APPLICABLE TO ALL RECOMMENDATIONS AND GUIDANCE NOTES IN SECTION FOUR

1. The Recommendations and Guidance Notes apply to all medium term note programmes and debt issuance programmes, including asset backed and covered bond programmes, and regardless of the name used to describe the programme, where provision is made for debt instruments to be distributed or placed in the international capital markets.

2. ICMA Members acting as arranger for a medium term note programme will be presumed – unless and to the extent the dealers are informed to the contrary in writing – to be applying ICMA Recommendations to the programme.

3. Any reference to a prospectus includes Base Prospectuses, Registration Documents, listing particulars, offering circulars, information memoranda or any similar document.

4. It is likely that these Recommendations and Guidance Notes will be updated again to take account of market practices which may evolve following the implementation of the Prospectus Directive (2003/71/EC) in the EU.

MEDIUM TERM NOTE PROGRAMMES

RECOMMENDATION 4.1

EXECUTION OF AGREEMENTS AND CONTENT OF PROGRAMME DOCUMENTATION

1. The arranger of a medium term note programme should send to each of the dealers for review and comment the latest drafts of the prospectus and the documents to be signed by the dealers, for receipt not later than ten full business days prior to the deadline for comments to be received in the case of a new programme, and seven full business days in the case of an amendment to or annual update of an existing programme. There should be at least five full business days between the deadline for comments to be received and the date fixed for signing.

If new products are added to a programme as part of a programme update and, also in the case of existing programmes being amended to be retail Prospectus Directive compliant, the review period should be ten full business days. Asset-backed and Structured Investment Vehicle (SIV) programmes should have a review period of ten full business days in all circumstances.

2. The dealers are entitled to review and comment on all material agreements, the comfort letter(s), legal opinion(s) and other conditions precedent when a programme is being established or renewed. The arranger should send to each of the dealers for review and comment the latest drafts of any guarantee or deed of covenant, the comfort letter(s), legal opinion(s), trust deed, if any, fiscal agency agreement and any other material agreements for receipt not less than ten full business days prior to the deadline

for comments to be received for new programmes, and seven full business days in the case of an amendment or annual update of an existing programme. There should be at least five full business days between the deadline for comments to be received and the signing date for the programme. Arrangers should, upon request, make drafts of other documentary conditions precedent available a reasonable period of time before their intended delivery date.

3. Programme documentation should include the forms of pricing supplement and/or Final Terms and subscription agreement to be used for drawdowns.

MEDIUM TERM NOTE PROGRAMMES

RECOMMENDATION 4.2

CONDITIONS PRECEDENT

The following should be delivered in connection with the establishment of a medium term note programme:

- an appropriate comfort letter(s) from the auditor to the issuer (and any guarantor) dated the signing date of the programme and addressed to the arranger and the dealers; and

- relevant opinions from appropriate legal counsel (for example, from the country of incorporation of the issuer and guarantor, if there is one, and the country whose laws govern the securities to be issued) confirming (amongst other things) that the securities to be issued are (or will create) valid and binding rights against the issuer, and that the contracts (including any contracts relating to security issued in connection with the securities) relating to the programme and the rights of the arranger and the dealers under them are valid and binding, such legal opinion to be dated the signing date of the programme and addressed to the arranger and the dealers.

The comfort letter(s) and the legal opinion(s) should also be provided not less frequently than on any annual update of the programme, and on the occasion of any material amendment to the programme, and be reviewed by external counsel.

Legal opinions issued in connection with an annual update or material amendment to a programme should cover all relevant contracts, including those associated with the annual update or amendment, not just the original programme contracts.

MEDIUM TERM NOTES PROGRAMMES

RECOMMENDATION 4.3

MEETINGS AND CONFERENCE CALLS WITH ISSUERS

Dealers should be afforded sufficient time to prepare for meetings and conference calls with the issuer and guarantor in which they are invited to participate, including time to review the prospectus.

MEDIUM TERM NOTE PROGRAMMES

RECOMMENDATION 4.4

AMENDMENTS TO PROGRAMME DOCUMENTATION BY DEALERS OTHER THAN THE ARRANGER

If a dealer, or Lead Manager of a new issue, who is not the arranger, updates a programme, they must notify the arranger. Amendments to the disclosure document should be sent promptly to the arranger and the permanent dealers.

MEDIUM TERM NOTE PROGRAMMES

RECOMMENDATION 4.5

STATUS OF ARRANGER

1. Programme documentation usually addresses the relationships between the arranger and the dealers in the establishment and maintenance of a programme.

2. It is recommended that where such a provision is included in programme documentation the following standard form clause be used:

Each of the Dealers agrees that the Arranger has only acted in an administrative capacity to facilitate the establishment and/or maintenance of the Programme and has no responsibility to it for

(a) the adequacy, accuracy, completeness or reasonableness of any representation, warranty, undertaking, agreement, statement or information in the Information Memorandum[1], any Final Terms[2], this Agreement or any information provided in connection with the Programme, or

(b) the nature and suitability to it of all legal, tax and accounting matters and all documentation in connection with the Programme or any Tranche.

Notes

[1] *Insert title of document as appropriate, for example, Base Prospectus*

[2] *Insert 'Pricing Supplement' if appropriate*

MEDIUM TERM NOTE PROGRAMMES

RECOMMENDATION 4.6

DISTRIBUTION OF PROGRAMME DOCUMENTATION

This Recommendation applies when programmes are established, updated or amended by arrangers in their capacity as arranger of the programme.

Arrangers are expected to distribute to the dealers without delay conformed and/or original copies of the Programme or Dealer Agreement, (or supplement or update thereto as appropriate), and prospectus or similar document or supplement thereto. Arrangers should deliver other condition precedent documents to the dealers promptly after the signing, annual update or amendment of the programme, and in any event, before the issuer draws down from the programme. If there is a delay in the issuer delivering documents to the arranger, the arranger should tell the dealers and give an expected delivery date.

A complete set of programme documentation, either hard copy, electronic or CD-ROM, should be prepared and delivered to the dealers within two weeks of programme signing. When a programme is updated or amended, a complete set of documentation for the update/amendment should be delivered to the dealers within two weeks of the update/amendment.

MEDIUM TERM NOTE PROGRAMMES

RECOMMENDATION 4.7

HIGHLIGHTING CHANGES IN MEDIUM TERM NOTE PROGRAMMES

When a programme is being updated or amended, the arranger should arrange for drafts of the documentation to be marked to show changes from the existing programme documentation. All documents should be cumulatively blacklined from the most recent update.

New drafts of documents should be blacklined from previous drafts circulated, including comfort letters.

The arranger should notify dealers if significant changes to the terms and conditions of the securities are included in a programme amendment or annual update, and provide an explanation for the change.

MEDIUM TERM NOTE PROGRAMMES

RECOMMENDATION 4.8

RELATIONSHIP BETWEEN ARRANGERS AND DEALERS

1. The arranger is responsible for sending documents to the dealers in a form which is likely to be acceptable to them. If a particular point has been heavily negotiated with the issuer, the arranger should tell the dealers this and explain the reasons.

2. The arranger should ask for the relevant dealer's consent before disclosing to an issuer the name of the dealer who has given a particular comment on the documentation to the arranger or counsel for the dealers.

3. The arranger should seek permission from dealers before waiving conditions precedent for programme updates on their behalf.

MEDIUM TERM NOTE PROGRAMMES

GUIDANCE NOTE 1

IMPORTANCE OF ACCURATE, COMPLETE AND CURRENT INFORMATION IN PROSPECTUSES

An issuer who relies on the current prospectus for a medium term note programme, to enable it to fulfill its legal disclosure obligations without the need to prepare a fresh prospectus or supplement for each issue under the programme, should be aware that it has a legal responsibility to ensure, in the context of each issue under the programme, that the information in such prospectus is correct and complete and that it is not misleading.

For example, when an offering is subject to the EU Prospectus Directive (2003/71/EC), the issuer has a duty to ensure that the prospectus contains all information which, according to the particular nature of the issuer and of the securities offered to the public or admitted to trading on a regulated market, is necessary to enable investors to make an informed assessment of the assets and liabilities, financial position, profits and losses, and prospects of the issuer and of any guarantor and of the rights attaching to such securities.

The Prospectus Directive also provides that every significant new factor, material mistake or inaccuracy relating to the information included in the prospectus which is capable of affecting the assessment of the securities arising between the time the prospectus is approved and the final closing of the offer to the public, or the time when trading on a regulated market begins, shall be mentioned in a supplement to the prospectus.

MEDIUM TERM NOTE PROGRAMMES

GUIDANCE NOTE 2

REVERSE ENQUIRIES IN MEDIUM TERM NOTE PROGRAMMES

Issuers are encouraged to make arrangements to ensure that banks and securities firms, which are not parties to the programme agreement, are able to obtain copies of programme documentation quickly to facilitate reverse enquiries. If no such specific arrangements have been made, requests for programme documentation should be addressed to the issuer in the first instance.

MEDIUM TERM NOTE PROGRAMMES

GUIDANCE NOTE 3

LEGAL OPINIONS FOR MEDIUM TERM NOTE PROGRAMMES

Lead Managers/dealers for issues and drawdowns made under a medium term note programme should be aware that the legal opinion(s) delivered on the signing or update of the programme documentation may not cover specific issuances under the programme, including the subscription agreement, if any, or the enforceability or validity of the particular issue of securities.

MEDIUM TERM NOTE PROGRAMMES

GUIDANCE NOTE 4

DISCLOSURE OF RATINGS IN CONNECTION WITH MEDIUM TERM NOTE PROGRAMMES

Note: This guidance is being revised as of July 2005 to reflect implementation of the EU Prospectus Directive

Disclosure of ratings in the offering circular for a medium term note programme is generally not desirable as the offering circular would no longer be accurate if an issuer's/guarantor's debt ratings change and such ratings may not be accurate for a particular tranche of notes. In addition, rating information is available to market participants and investors from the rating agencies and other widely used sources.

If ratings are included in the offering circular, the language should accurately distinguish between types of debt (such as senior/subordinated debt, short term/long term debt) that may be issued under a programme. It should also refer to the possibility that tranches of notes under a programme and/or certain categories of debt of the issuer/guarantor are not rated or may be given a rating other than that referred to in the offering circular.

Market participants should be aware that following a request from an issuer, rating agencies generally assign individual ratings to a tranche of notes. Such ratings may be different from the ratings assigned to a programme or notes as set out in the offering circular, or may be provisional and never formally assigned because the issuer fails to take certain action required by the rating agency.

If ratings are included in the offering circular, market participants should consider with issuers whether to include language in the offering circular to point out the potential inaccuracy of those ratings for any particular tranche of notes. Market participants should also consider with issuers if and how to disclose individual ratings for a tranche of notes based on relevant stock exchange requirements, legal and regulatory advice and market practice. However, the offering circular should not oblige market participants to do so.

If ratings are included in the offering circular, a change in such ratings (as they relate to the issuer's/guarantor's debt generally) should generally result in a supplemental or new offering circular in accordance with any relevant stock exchange or legal or regulatory requirements and the need for accuracy in offering circulars.

Any reference to ratings included in the offering circular may use language comparable to the following:

The Programme [or the notes [set out specific categories of debt] issued under the Programme] has [have] been rated xxx [include relevant [senior/subordinated, short term/long term] ratings] by [include names of rating agencies]. Tranches of notes issued under the Programme may be rated or unrated. Where a tranche of notes is rated, such rating will not necessarily be the same as the rating[s] assigned to the Programme [notes]. A security rating is not a recommendation to buy, sell or hold securities and may be subject to suspension, reduction or withdrawal at any time by the assigning rating agency.

MEDIUM TERM NOTE PROGRAMMES

GUIDANCE NOTE 5

AUTHORISATION OF NOTES AND GUARANTEES ISSUED UNDER MEDIUM TERM NOTE PROGRAMMES

When a medium term note programme is established, updated or amended, care should be taken to avoid the need for a new, specific authorisation at board (or similar) level to be given at the time of each individual tranche of notes and any related guarantees. The need for such authorisation is usually inconsistent with the relatively short timetable for such issues.

Where such board level authorisation is required for each individual tranche of notes or related guarantee, that fact should be noted in the prospectus, and the form of pricing supplement or Final Terms for the programme should contain a field indicating that such authorisation for the notes and related guarantee is in place, for instance:

Date [Board] Approval for issuance of Notes [and Guarantee] obtained: [ ] [and guarantee [ ]]

SECTION FIVE

RECOMMENDATIONS APPLICABLE TO EURO COMMERCIAL PAPER

NOTES APPLICABLE TO ALL RECOMMENDATIONS IN SECTION FIVE

1. The Recommendations apply to all Euro commercial paper programmes and the notes and certificates of deposit issued thereunder regardless of the currency of denomination, where provision is made for the notes to be placed in the international monetary markets.

2. ICMA Members will be presumed – unless and to the extent the market is informed to the contrary in writing – to be applying ICMA Recommendations to the programme and the notes issued thereunder.

EURO COMMERCIAL PAPER

RECOMMENDATION 5.1

ECP CONVENTIONS

1. Dealers are responsible for ensuring compliance with selling restrictions and any minimum denominations established by regulation or official guidelines.

Subject to any higher legal requirements, the minimum tradeable amounts (i.e., minimum denominations) for Euro commercial paper shall be:

Sterling	£100,000 (certificates of deposit and commercial paper)
US Dollars	$500,000
Euros	€500,000
Swiss francs	SFr500,000
Japanese Yen	Y100,000,000
Australian Dollars	A$1,000,000
Canadian Dollar	C$500,000
New Zealand Dollars	NZ$1,000,000
Hong Kong Dollars	HK$2,000,000

The minimum incremental amount above the minimum denomination shall be one unit of the currency; provided that the minimum incremental amount in Japanese Yen shall be Y100,000,000.

2. As a general rule issuing and paying agents may rely on issuing instructions from the dealer and will not require confirmation of each tranche from the issuer. Issuers may require confirmation.

3. Issuing and paying agents and issuers may agree to provide for netting of the new issue proceeds against the amounts due on paper which is maturing on the same day provided the new and maturing paper is denominated in the same currency.

4. The minimum maturity shall be one day.

5. These conventions are applicable to Euro commercial paper issued after 31 March 2003.

SECTION SIX
APPENDICES

APPENDIX A: ICMA Screen and Telephone Invitation Check-list for issues of debt and equity-linked debt instruments

APPENDIX B: Explanatory notes relating to issues of debt and equity-linked debt instruments

APPENDIX A

ICMA SCREEN AND TELEPHONE INVITATION CHECK-LIST FOR ISSUES OF DEBT AND EQUITY-LINKED DEBT INSTRUMENTS

GUARANTEE:

Contractual:	indemnity	surety
Statutory:	jurisdiction	

RATINGS	S&P	Moody's	Other
This issue			
Other issues			

RANKING

Secured & security
Senior
Subordinated
Junior subordinated

NEGATIVE PLEDGE

By issuer:		Guarantor:	Subsidiaries: all/principal
Type:	obligations	indebtedness	securities
	traded	foreign	

CALL PROVISIONS

By Issuer:	None	
	Yes	Amount Date
Price		
By Holder:	None	
	Yes	What Action

TAX

Domestic tax gross up: Tax redemption
Identification protection:
No interest payments in US:

SALES RESTRICTIONS

US: 90 day lock up other termination date
Great Britain:
Issuer's jurisdiction: Jurisdiction of currency:
Private placement: Lead Manager only with Lead Manager permission

EXPENSE CAP

Amount: ICMA: Other:

STABILISATION:

ICMA: Other:

FORCE MAJEURE

None Yes Deviations:
Third-party contract conditions

CROSS DEFAULT

None:
Yes: Issuer: Guarantor:
Type:
Domestic issues:

APPENDIX B

EXPLANATORY NOTES RELATING TO ISSUES OF DEBT AND EQUITY-LINKED DEBT INSTRUMENTS

I. GUARANTEES

INTRODUCTION

A. Guarantees are either statutory or contractual in form.

B. A contractual guarantee can broadly be classified as an indemnity or a surety. The former has the following characteristics:

(a) the amount that can be claimed includes all principal, premium and interest (including additional amounts under gross up provisions) which is due,

(b) the guarantee is valid irrespective of the validity, regularity and enforceability of the bond or note against the issuer,

(c) the guarantee is enforceable whether or not there has been any action taken to enforce the terms of the bond or note against the issuer,

(d) the guarantee is not affected by any waiver or consent or time or indulgence given by the bond holder or note holder in respect of non-payment or breach of covenant by the issuer.

C. A contractual guarantee without any or all of the characteristics mentioned under B (b), (c) and (d) should normally be classified as a surety.

D. In international bond issues contractual guarantees of the indemnity type, which are much more favourable for the investor, are the norm.

E. The effect of a statutory guarantee depends entirely on the terms of the statute pursuant to which the guarantee is given. No broad generalisations can be made about this type of guarantee.

SCREEN, TELEPHONE INVITATION AND INVITATION TELEX

1. If no specific information is provided, the absence of a guarantee should be presumed.

2. If there is a guarantee, the screen, the telephone invitation and the invitation telex should indicate whether the guarantee is statutory or contractual. If it is contractual it should only be described as unconditional and irrevocable if it is of an indemnity type, otherwise it should be disclosed which of the characteristics in B(a) to B(d) above are missing from the guarantee. If the guarantee is statutory its principal characteristics should preferably be disclosed, otherwise reference to the offering circular for a summary should be made.

3. The screen, telephone invitation and invitation telex should also indicate if the guarantee is subordinated or not supported by a negative pledge (see under III).

4. If under applicable law the guarantee is subject to a maximum amount, this limit should be stated.

IIA. RATINGS

INTRODUCTION

A. Ratings of the relevant issue by Moody's and Standard and Poor's should be disclosed. Disclosure of ratings of the issue by other rating agencies is at the option of the Lead Manager.

B. With regard to other outstanding issues of the issuer or guarantor, ratings by Moody's and Standard and Poor's of public long-term debt should be disclosed if the specific issue is not itself rated. If an issue of the issuer has a private rating, this rating may be disclosed if it is periodically updated.

C. There should be no disclosure of ratings of other outstanding debt of the issuer or guarantor if these ratings are based on a third-party guarantee. Commercial paper ratings need not be disclosed.

D. If after the invitation telex has been sent but before the closing of an issue:

(a) the ratings cited in the invitation telex are changed,

(b) the issue is rated differently from the rating indicated in the invitation telex, or

(c) issues whose ratings are referred to in the invitation telex are placed on Moody's "Review List" and/or Standard and Poor's "Watch List",

the Lead Manager should notify the managers, underwriters and selling group members of such an event.

SCREEN, TELEPHONE INVITATION AND INVITATION TELEX

1. If the issue is specifically rated by Moody's and Standard and Poor's, that rating should be disclosed.

2. If other outstanding public long-term debt of the issuer or guarantor ranking equally with the issue has a current rating by Moody's and/or Standard and Poor's, that rating should be disclosed.

3. If the issue itself or debt of equal status are not rated while other outstanding public long-term debt of the issuer or guarantor which ranks senior or junior to the issue is rated by Moody's and/or Standard and Poor's, that rating should be disclosed together with a statement as to the inferior or superior status of the current issue.

4. If issues of the issuer or guarantor are currently on Moody's "Review List" and/or Standard and Poor's "Watch List" this fact should be disclosed together with the indicated outcome of such change (i.e. positive or negative).

IIB. RATINGS

EVENT RISK

SCREEN, TELEPHONE INVITATION AND INVITATION TELEX

A. If the issuer has agreed to an event risk clause for the issue, this should be disclosed.

B. The effect of the event risk clause should be disclosed in summary form.

C. If the event risk clause has been rated by Standard and Poor's, this should be disclosed. Disclosure of ratings of the event risk clause by other rating agencies is at the option of the Lead Manager.

D. If after the invitation telex has been sent out but before the closing of an issue there is any change to the event risk clause or to the status of its rating with Standard and Poor's, the Lead Manager should notify the managers, underwriters and selling group members of such a change.

III. RANKING OF THE BONDS

INTRODUCTION

A. Euro-issues typically fall into one of the following ranking categories:

(a) secured;

(b) senior (unsecured, unsubordinated);

(c) subordinated (mainly for certain bank issues and many convertibles); or

(d) junior (deeply) subordinated.

For banks, deposit notes rank equally with deposits while subordinated or capital notes are normally junior to deposits. Equity notes are often deeply subordinated.

B. (a) Secured and junior (deeply) subordinated debt (including perpetuals)

Many varieties exist which cannot easily be summarised.

(b) Senior debt for industrials

This may typically be described as follows:

The bonds [or notes] will be direct, unconditional, and unsecured obligations of the issuer and will rank pari passu amongst themselves and [except for .....], will rank equally with all other present and future unsecured and unsubordinated obligations of the issuer.

(c) Senior debt for banks

This may typically be described as follows:

The notes will be unsecured obligations of the issuer and will rank pari passu amongst themselves and with all other present and future unsecured obligations of the issuer (other than

subordinated obligations), including those in respect of deposits for the time being outstanding with it.

(d) Subordinated debt for banks

This may typically be described as follows:

The notes will be unsecured obligations of the issuer and will be subordinated to the claims of all depositors and other unsubordinated creditors [except for ....].

(e) Subordinated debt in the case of convertibles

This may typically be described as follows:

The obligations will be subordinated and junior in right of payment (to the extent set out in the Trust Deed) to the prior payment in full amounts then due on senior debt of the issuer.

The definition of senior debt would then be included in the prospectus but not normally in the invitation telex.

SCREEN, TELEPHONE INVITATION AND INVITATION TELEX

1. In the case of secured debt, the status and ranking should be spelt out in reasonable detail.

2. In the case of senior ranked debt, unless peculiarities exist, a simple, concise description such as "unsecured and unsubordinated" would be sufficient. In the case of banks, the ranking relative to deposits should be specifically addressed.

3. In the case of subordinated debt, the extent to which the rights of the investor are subordinated to the prior claims of other creditors should be clearly described.

4. Where the debt ranks below subordinated obligations, the specific ranking of the securities must be clearly described. For example, in the case of issues by banks of equity notes or equity commitment notes, the specific ranking of the securities and, if applicable, details of any relationship between the repayment of the securities and the sale of equity by the bank should be disclosed in full.

5. It would be helpful (but not in itself sufficient) to give an indication of the ranking of the securities by including an appropriate descriptive adjective in the title of the issue, such as:

Collateralised Floating Rate Notes
Floating Rate **Subordinated** Notes
Floating Rate **Deposit** Notes

IV. NEGATIVE PLEDGE

INTRODUCTION

A. A negative pledge is normally given by the issuer and the guarantor, if any, to ensure that other creditors do not obtain a better claim to assets on liquidation. The essence of the undertaking is not to create or assume any mortgage, charge, lien or other encumbrance over any present or future assets or revenues to secure other obligations, usually for borrowed money including guarantees, without securing the issue equally and rateably therewith.

US issuers tend to give negative pledges that follow US domestic practice covering other indebtedness with exceptions, many of which are of a standard nature. Non-US issuers may limit the pledge by specifying the type of indebtedness, e.g. foreign securities or traded securities to which the pledge is applicable.

B. Obligations for borrowed money in this context sometimes include moneys arising under sale and leaseback transactions.

C. Traded securities in the above context are securities (bonds, notes, debentures and similar paper) capable of being quoted, listed or ordinarily traded on any stock exchange or over-the-counter markets.

D. Industrial issuers may be prohibited from incurring debt secured by "principal" property or by shares or stock in subsidiaries unless the aggregate amount of all such secured debt does not exceed 5–10% of consolidated net tangible assets subject to certain specified exceptions.

E. The tighter the drafting of the negative pledge the more likely that there will be exceptions, the more common of which are intended to enable the issuer to carry on the normal course of business. Some exceptions while achieving this objective materially weaken the negative pledge. The intention is not to require in the invitation telex a list of all the common exceptions particularly of US issuers but the Lead Manager should disclose those which are uncommon and appear material.

F. The issuer may have accepted negative pledges in domestic public issues and co-managers may enquire as to their general nature.

SCREEN, TELEPHONE INVITATION AND INVITATION TELEX

1. The absence of a negative pledge must be disclosed.

2. The screen, telephone invitation and invitation telex should disclose the basic characteristics of the negative pledge and any uncommon exceptions which appear material.

V. MARKET RELATED CALL PROVISIONS

INTRODUCTION

A. In Euro-issues the issuer normally has the right to redeem all or part of the issue at pre-arranged dates and prices prior to the final maturity date of the securities; this is known as a "call provision".

B. In certain Euro-securities, the bond holders have the right to demand redemption at pre-arranged dates and prices prior to the final maturity date of the securities; this is known as "put provision".

C. Redemption prior to the final maturity date of the securities as a result of changes in taxation, legislation or disclosure requirements is addressed under VI.

D. In certain Euro-issues, the issuer has the right to extend the final maturity date. The interest rate for the extended period may be determined at the issuer's discretion. Such a security is known as an "extendable bond".

SCREEN, TELEPHONE INVITATION AND INVITATION TELEX

1. The earliest date and price of a call provision or a put provision should be disclosed on the screen and in the telephone invitation; full details including the dates and prices of a call provision or a put provision should be stated in the invitation telex.

2. In the case of an extendable bond, the invitation telex should describe:

- the manner in which the interest rate for the extended period is determined,
- the revised maturity date resulting from the extension,
- the action, if any, to be taken by the bond holder,
- the consequence of a failure of a bond holder to take action.

VI. TAXATION, TAX REDEMPTION AND PROTECTION AGAINST IDENTIFICATION OR CERTIFICATION

INTRODUCTION

A. Euro-issues are structured so that the interest on the bonds or notes is free of all income tax in the country of the issuer (and guarantor) provided the investor has no connection with that country other than the mere holding of the bond or note. The terms of the issue normally provide that in the event of a change in tax laws which would impose income tax on interest by way of withholding tax, the issuer will gross up for the withholding. In most issues, the issuer would then also have the right to redeem the bonds or notes.

B. Most Eurobond issues are structured so that the investors are able to collect principal and interest without being required to sign certificates or otherwise identify themselves. The most notable exceptions are the specially targeted registered issues of the US Government and Government Agencies and the floating rate notes of the Kingdom of Belgium and any registered bonds.

C. For US corporate bearer issues, protection is given for the possible imposition of certification or identification requirements. Some floating rate issues omitting the protection have generally been intended for institutional investors (with large denominations, typically $50,000).

D. A choice of paying agents in several countries ensures that there is always a place where investors can receive interest free of withholding tax or certification or identification requirements. Paying agents in Canada, Germany, Luxembourg, The Netherlands, Singapore and Switzerland are also free from any local withholding tax or certification and identification requirements.

Under US tax requirements, Eurobonds or notes in bearer form may not provide for payment of interest in the US. In the case of US issuers, payment may not be made by means of a cheque mailed to an address in the US or by wire transfer to an account in the US. In the case of non-US issuers payment may be made (by cheque or wire transfer) by crediting an account in the US.

E. The relevant provisions in invitation telexes may be set forth in summary form using language similar to the following:

(a) **Taxes**

All payments of principal [premium, if any] and interest will be made free and clear of [country of issuer] withholding and other taxes, subject to customary exceptions. In the event that [such taxes are imposed/certain adverse tax consequences occur], the issuer will pay additional amounts so that [country of issuer] aliens will receive the full amount of principal [premium, if any] and interest which otherwise would have been due, [subject to customary exceptions].

(b) **Optional Redemption**

[On or after ..... the issuer may redeem .../non-redeemable except] in the event of imposition of certain [country of issuer] withholding taxes the notes [at any time/at the next interest payment date] in whole at [price], plus accrued interest and any additional amounts due up to such date.

(c) **US Information Reporting and Back-up Withholding Taxes (Fixed and Floating Rate Notes)**

Under temporary regulations, payments of principal and interest on the notes to a holder made by the issuer or its paying agents outside the United States will generally not be subject to information reporting or back-up withholding unless the issuer or its paying agent has actual knowledge that the holder is a United States person. With certain exceptions the issuer will be required to redeem the notes at par without additional amounts plus any accrued interest within one year in the event that payments thereon outside the United States should become subject to certain US certification, information or other reporting requirements, the effect of which is the disclosure to the issuer, a paying agent or a governmental authority of the nationality, identity or residence of a beneficial owner who is a United States alien. If such requirements can be satisfied by the payment of a back-up withholding tax or similar charge, the issuer will have the option to pay additional amounts in respect of such charges rather than redeem.

(d) **US Information Reporting and Back-up Withholding Taxes (Zero Coupon Bonds)**

Under temporary regulations, payments of principal and interest on the notes to a holder made by the issuer or its paying agents outside the United States will generally not be subject to information reporting of back-up withholding unless the issuer or its paying agent has actual knowledge that the holder is a United States person.

If US information reporting requirements are changed so as to require disclosure of the nationality, residence or identity of the beneficial owners of a bearer note, the issuer will publish a notice permitting any holder of a bearer note to present the notes for redemption at the issue price plus accrued original issue discount to the date of redemption (but without any additional amounts) within 90 days of such notice. If such requirements can be satisfied by the payment of a back-up withholding tax or similar charge, the issuer will have the option to pay the additional amounts and not offer the redemption option.

SCREEN, TELEPHONE INVITATION AND INVITATION TELEX

1. It is presumed that the initial payments are free of income tax and the withholding tax regime. Any deviations should be disclosed.

2. It should be disclosed whether there is a gross up provision and a tax call possibility, in the latter case with the redemption price. If the tax call can be triggered by events other than the imposition of withholding tax, they should be specified.

3. In all cases it should be stated whether the redemption date must be an interest payment date.

4. In the case of US issuers it should be stated whether there is protection against the imposition of certification or identification requirements. If such protections differ materially from the one set out above in E(c) and E(d), the differences should be spelled out.

PRINCIPLES FOR TAX REDEMPTION CLAUSES

Optional tax redemption provisions in circumstances where withholding tax has been or will be imposed should comply with the following principles:

1. The right to call only should arise when a change in law or in the application or official interpretation thereof has occurred and, as a result, the issuer has or will become obligated to gross up.

2. Notice of redemption should not be given earlier than the date 90 days before the earliest date on which grossing up would be required were a payment in respect of the relevant securities then due.

3. An issuer should be required to take reasonable measures available to it to avoid the incidence of withholding tax and the obligation to gross up.

4. An issuer should satisfy the Trustee of its securities (if any) and/or provide certification that the necessary conditions precedent to the right to redeem have been met.

5. In the case of floating rate securities, redemption should be made only on an interest payment date.

MODEL ENGLISH LAW TAX REDEMPTION CLAUSE

The Notes may [also] be redeemed at the option of the Company in whole, but not in part, at any time, on giving not less than 30 nor more than 60 days' notice in accordance with Condition [Notices] (which notice shall be irrevocable), at the principal amount thereof, together with interest accrued to the date fixed for redemption, if (1) the Company [satisfies the Trustee immediately prior to the giving of such notice that it]* has or will become obliged to pay additional amounts as provided or referred to in Condition [Taxation] as a result of any change in, or amendment to, the laws or regulations or [ ] or any political subdivision or any authority thereof or therein having power to tax, or any change in the application or official interpretation of such laws or regulations, which change or amendment becomes effective on or after [date of Subscription Agreement], and (2) such obligation cannot be avoided by the Company taking reasonable measures available to it, provided that no such notice of redemption shall be given earlier than 90 days prior to the earliest date on which the Company would be obliged to pay such additional amounts were a payment in respect of the Notes then due. Prior to the publication of any notice of redemption pursuant to this paragraph, the Company shall deliver to the [Trustee]* [Fiscal Agent]** a certificate signed by two [Directors] of the Company stating that [the obligation referred to in (2) above cannot be avoided by the Company taking reasonable measures available to it and the Trustee shall be entitled to accept such certificate as sufficient evidence of the satisfaction of the condition precedent set out in (2) above in which event it shall be conclusive and binding on the Note holders and the Coupon holders]* [the Company is entitled to effect such redemption and setting forth a statement of facts showing that the conditions precedent to the right of the Company so to redeem have occurred, and an opinion of independent legal advisers of recognised standing to the effect that the Company has or will become obliged to pay such additional amounts as a result of such change or amendment].**

* *Applies to issues constituted by a Trust Deed*
** *Applies to issues under a Fiscal Agency Agreement*

MODEL US TAX REDEMPTION CLAUSE

The Notes may [also] be redeemed at the option of this Company in whole, but not in part, at any time, on giving not less than 30 nor more than 60 days' notice in accordance with "Notices" below (which notice shall be irrevocable), at the principal amount thereof, together with accrued interest to the date fixed for redemption, if the Company has or will become obligated to pay additional interest on the Notes as described under "Payment of Additional Interest" as a result of any change in, or amendment to, the laws (or any regulations or rulings promulgated thereunder) of the United States or any political subdivision or taxing authority thereof or therein, or any change in the application or official interpretation of such laws, regulations or rulings, which change or amendment becomes effective on or after [date of Underwriting/ Subscription Agreement], and such obligation cannot be avoided by the Company taking reasonable measures available to it, provided that no such notice of redemption shall be given earlier than 90 days prior to the earliest date on which the Company would be obliged to pay such additional interest were a payment in respect of the Notes then due. Prior to the publication of any notice of redemption pursuant to this paragraph, the Company shall deliver to the Fiscal Agent a certificate stating that the Company is entitled to effect such redemption and setting forth a statement of facts showing that the conditions precedent to the right of the Company so to redeem have occurred, and an opinion of independent counsel of recognized standing to the effect that the Company has or will become obligated to pay such additional interest as a result of such change or amendment.

The Notes are also subject to redemption if certain events occur regarding US information reporting requirements, as described under "Special Tax Redemption" below.

VII. SALES RESTRICTIONS AND PRIVATE PLACEMENT

INTRODUCTION

A. The current form of appropriate sales restrictions should be set out in full in the subscription agreement.

SCREEN, TELEPHONE INVITATION AND INVITATION TELEX

1. Sales restrictions in the countries of the issuer, the guarantor (if any) and the currency should be described and any substantial deviation from generally accepted forms of sales restrictions in other jurisdictions should be disclosed.

If indicating what US sales restrictions apply, the screen and invitation telex should specify the following, deleting as appropriate:

US: [Not/144A Eligible/(Restrictions)], [Reg. S. 1/2/3], [TEFRA D/C]

The key to these simplified codes is as follows:

Not 144A Eligible	144A Sales are not permitted.
144A Eligible	144A Sales by distributors are permitted generally as part of primary sales.
144A Eligible (Restrictions)	144A Sales are permitted as part of primary sales, but subject to the specified restrictions, e.g. Lead Manager(s) only.
Reg. S. 1/2/3	The issuer is a Regulation S. Category 1, 2 or 3 issuer, as appropriate.
TEFRA D/C	The Internal Revenue Service "D Rules" or "C Rules" as appropriate apply to the issue.

If, at the time of launch, not all decisions relating to the applicable US selling restrictions have been taken by the Lead Manager and issuer, blanks may be left but the Lead Manager should notify the syndicate as soon as the appropriate sales restrictions have been chosen.

If blanks are left, managers/selling group members/underwriters should assume that, until notified to the contrary, the TEFRA D rules apply and no sales may be made to US persons or in the USA in order to comply with Regulation S. In offerings not denominated in US Dollars, the same codes may be used, but detailed information on US selling restrictions cannot always be expected in such circumstances.

2. If the mandate requires that the issue is not distributed in a particular country or if the Lead Manager wishes to reserve to himself the distribution in a particular country, this should be disclosed.

3. If a US private placement option is available other than a 144A option, it should be disclosed as should the identity of the managers who can use this option, who can purchase the securities, and what minimum denominations are required to be purchased.

VIII. EXPENSE CAPS

This has been incorporated into Recommendation 1.8

IX. FORCE MAJEURE

A. The managers and underwriters are normally discharged from their underwriting obligations if certain events occur before the payment date.

B. It is recommended that one of the following two force majeure clauses should be used in straight debt issues and that it should be promptly disclosed which of Clause 1 or Clause 2 is being used. Any material variation to, or the non-use of, either Clause should also be promptly disclosed.

Clause 1

Notwithstanding anything contained in this Agreement, [...] ("the Lead Manager") on behalf of the Managers may by notice to the Issuer [and the Guarantor] terminate this Agreement at any time before the time on the Closing Date when payment would otherwise be due under this Agreement to the Issuer in respect of the Securities if:

(a) in the opinion of the Lead Manager, circumstances shall be such as:

  (i) to prevent or to a material extent restrict payment for the Securities in the manner contemplated in this Agreement; or

  (ii) to a material extent prevent or restrict settlement of transactions in the Securities in the market or otherwise; or

(b) in the opinion of the Lead Manager, there shall have been:

  (i) any change in national or international political, legal, tax or regulatory conditions; or

  (ii) any calamity or emergency,

  which has in its view caused a substantial deterioration in the price and/or value of the Securities,

and, upon notice being given, the parties to this Agreement shall (except for the liability of the Issuer [and the Guarantor] in relation to expenses

as provided in Clause [...] and except for any liability arising before or in relation to such termination) be released and discharged from their respective obligations under this Agreement.

Clause 2

Notwithstanding anything contained in this Agreement, [...] ("the Lead Manager") on behalf of the Managers may by notice to the Issuer [and the Guarantor] terminate this Agreement at any time before the time on the Closing Date when payment would otherwise be due under this Agreement to the Issuer in respect of the Securities if, in the opinion of the Lead Manager, there shall have been such a change in national or international financial, political or economic conditions or currency exchange rates or exchange controls as would in their view be likely to prejudice materially the success of the offering and distribution of the Securities or dealings in the Securities in the secondary market and, upon notice being given, the parties to this Agreement shall (except for the liability of the Issuer [and the Guarantor] in relation to expenses as provided in clause [...] and except for any liability arising before or in relation to such termination) be released and discharged from their respective obligations under this Agreement.

C. Conclusion of third-party agreements, such as swaps, have sometimes been made conditions precedent to the closing of a Euro-issue. This is to be discouraged.

SCREEN, TELEPHONE INVITATION AND INVITATION TELEX

1. As stated in B above, it should be promptly disclosed which of Clause 1 or Clause 2 is being used. Any material variation to, or the non-use of, either Clause should also be promptly disclosed.

2. If the closing is made dependent on the conclusion of third-party contracts like swaps, the existence of such conditions should be stated.

X. CROSS DEFAULT

INTRODUCTION

A. The purpose of the cross default clause is to permit the acceleration of payment of principal or the exercise of other remedies to ensure that bond holders or note holders are in a similar position as far as remedies are concerned as other creditors of a troubled issuer. The cross default clause may extend to defaults of the guarantor. The event of default covered must on the whole be material so as not to create an unnecessary crisis.

B. In the strongest type of cross default clause the bonds or notes (together with accrued interest) become capable of acceleration:

(a) if any indebtedness of the issuer, the guarantor, a significant subsidiary or agency [in the case of sovereign issues] (i) shall become or be capable of becoming repayable prior to the due date by reason of default of the issuer, guarantor, significant subsidiary or agency or (ii) shall not be repaid at maturity, or

(b) if any guarantee given by the issuer, guarantor, significant subsidiary or agency shall not be honoured when due and called upon, or

(c) if a security for any such indebtedness or guarantees is enforced in favour of the creditors or such indebtedness.

C. Such a sweeping clause can be cut back in at least six different ways:

(a) limitation of the level of indebtedness covered: only external indebtedness, indebtedness for borrowed money, publicly issued debt or funded debt.

(b) limitation of whose debt is included: only issuer's and not guarantor's, significant subsidiaries' or agency's.

(c) elimination of immaterial defaults: only defaults in respect of an indebtedness or guarantee which exceeds a threshold which may range from $1,000,000 upwards. The threshold may also be expressed in terms of a percentage of the issuer's net worth or may be on an aggregate basis to cover a succession of small defaults.

(d) limitation of the triggering events: only actual acceleration as opposed to capability of being accelerated.

(e) inclusion of a grace period: they often range from 5 to 60 days. Many clauses also provide that they are not triggered if and so long as the issuer is contesting the acceleration in good faith. It is sometimes provided that the grace period starts running only after the holders of a specified percentage (10% to 25%) have given notice to the issuer.

(f) inclusion of a materiality test: some cross default clauses provide that they are not triggered unless the trustee certifies in writing that the default is, in his opinion, material.

SCREEN, TELEPHONE INVITATION AND INVITATION TELEX

1. It should be stated whether or not there is a cross default clause and, if the issue benefits from a guarantee, whether or not the guarantor's debt is covered.

2. Co-managers should be entitled to ask and be informed by the Lead Manager how the cross default clause varied from the strongest type set out above under B.

3. In addition, Lead Managers should be able to answer questions concerning the issuer's cross default clauses in its domestic public issues.

XI. EXPENSES

INTRODUCTION

The following may be helpful as an indicator of which expenses should be attributed to the Issuer, and which to the Lead Manager:

MANAGERS' EXPENSES

Lead Managers' direct out-of-pocket expenses include:

- Lead Managers' legal costs incurred in the preparation and negotiation of the new issue documentation, including Subscription/ Underwriting Agreements, preparation of the Offering Circular including Terms and Conditions of the bonds, preparation of any pricing or prospectus supplement, signing and closing agendas, and the cost of legal opinions addressed to the managers;
- Bibles, ISIN/CUSIP Numbers and similar expenses incidental to the execution of the new issue;
- Cost of related travel (i.e. for the purpose of document negotiation and due diligence);
- Telephone, telex, fax and courier charges; and
- Cost of any signing or closing ceremony, or gifts.

ISSUERS' EXPENSES

Expenses that should not be charged against Lead Managers' out-of-pocket expenses include:

- Printing and distribution of Offering Circular/Prospectus, or Listing particulars and any other printed documents or contracts;
- Printing and distribution of definitive bonds, global bonds, warrants, etc.;

- Preparation of Fiscal Agency Agreements/Trust Deed;
- Common depositary attendance fees and money transfer fees (if any);
- Costs and expenses in connection with Stock Exchange Listing applications;
- Any costs in connection with obtaining consents, approvals, authorisation of regulatory authorities;
- Issuers' own legal and accounting fees and expenses;
- Paying Agency and Trustee's costs and expenses;
- Advertising and any notices required in connection with the bonds; and
- Ongoing costs and expenses associated with the issue.

XII. THE POT SYSTEM

IPMA published Recommendation 1.20 (Pot Distribution) today. Recommendation 1.20 addresses the disclosure to be made by Bookrunners to syndicate members when launching a debt issue which is to be distributed by the 'pot' method.

The purpose of this explanatory memorandum is to provide some practical information on the pot system and pot system terminology, as currently used in the European international debt primary markets. Market practice in this area is continually evolving, and individual transactions are structured according to their specific circumstances. This memorandum is not intended to prescribe or endorse particular structures or practices. It is a cornerstone of the IPMA Recommendation that all relevant information must be clearly described to syndicate members when they are invited into a new issue.

BACKGROUND

In a 'pot' distribution, all or a portion of a new issue is set aside to be allocated to investors out of a central orderbook run by one or more of the Bookrunners for the issue. Other syndicate members contribute orders to the pot, but do not control the final allocation or distribution of bonds. This well-established US market practice has become common in the Euromarkets, including, but not only, benchmark issues, issues for investment grade and non-investment grade corporate borrowers and financial institutions, issuers who raise money in the capital markets infrequently, and structured issues such as Tier 1 capital. This method of distribution contrasts with the traditional Euromarket practice, whereby managers receive an allotment of bonds at the discretion of the Lead Manager, which they sell directly to their clients. This 'underwritten' distribution method (so-called because the Bookrunners 'underwrite' the price with the issuer based on existing market levels rather than deal-specific investor demand) is commonly used with frequent borrowers for whom market pricing and yield curves can be easily established.

The following comments are a guide to some current practices.

POT STRUCTURES

100% Pot: If a deal is launched as a 100% pot, the Bookrunners allocate the entire issue to investors brought into the pot by the Bookrunners and syndicate members. Co-lead and co-managers are invited to join the underwriting group for the issue, but do not receive an allotment of bonds, and do not determine which investors receive bonds.

Retention bonds: If a pot issue is launched with retention bonds, syndicate members who are not Bookrunners receive an allotment of bonds at a pre-announced specified percentage or amount of their underwriting commitment, which they sell directly to their clients, without disclosing to the Bookrunners which investors have bought them. The remaining bonds are allocated to investors from a pot managed by the Bookrunners.

Incentive pot: In some pot deals, a portion of the issue is set aside to be filled by orders from co-lead and co-managers. They may share one pot, or each group may have a separate pot. This structure may be used, for example, if there is likely to be specialist interest in an issue, because, for example, the issuer is well known in a particular region. The Bookrunners allocate orders contributed to this pot to the nominated investors at the Bookrunners' discretion, and the managers who bring orders in to the pot typically receive fees linked to the orders they submit, if they are filled out of the pot (see Economics below). Incentive pot bonds not subscribed through the incentive pot are allocated at the Bookrunners' discretion, but are often taken up by the Bookrunners. An incentive pot is sometimes called a performance pot or a flexipot.

Strategic reserve: issues for borrowers such as multilateral agencies and government issuers are occasionally launched with a small portion of the issue set aside for co-lead and/or co-manager orders. These bonds are allocated to investors by the issuer from orders brought into the pot by the co-lead and/or co-managers. As with other structures, bonds not taken up through the pot are allocated at the Bookrunners' discretion.

Selling group: Pot deals sometimes also include a selling group. The selling group is selected and managed by the Bookrunners. The Bookrunners allocate bonds to the selling group out of the Bookrunners' pot or retention bonds, based on demand, on a 'take and pay' basis.

ECONOMICS

Fee structures, like pot structures, continue to evolve. The following are examples of some structures currently in use.

Fixed economics: This refers to the fees which a co-lead or co-manager receives on a new issue pot deal, which are not linked to investor orders that that manager contributes to the pot.

Full fees: This is the most common fee structure for 100% pot deals. Managers receive combined management, underwriting and selling commission (i.e. 'full fees') based on their underwriting commitment, although they do not receive any bonds.

Incentive pots and strategic reserves: Co-leads and co-managers typically receive 'full fees' on their underwriting commitment (which includes any allotment of retention bonds). In addition they may receive either 'full fees' or selling concession on the sole orders they bring in to the pot which are filled. Managers do not typically receive fees on orders they place which are not filled. Fees on filled investor orders placed by more than one co-lead or co-manager are allocated at the Bookrunners' discretion.

Retention bonds: Co-leads and co-managers receive management, underwriting and selling commission on the part of their underwriting commitment which is designated 'retention'. Additional fees vary according to the structure of the pot – for example, 'full fees' on the balance of their underwriting commitment, or management and underwriting commission on the balance of their underwriting commitment and selling concession on orders in the pot which are attributed to co-lead and/or co-managers.

Selling groups: Selling group members do not underwrite the issue, and do not receive a management or underwriting fee. They are paid selling concession on their allotment.

Investors: Investors buy pot bonds at the re-offer price. In most issues the re-offer price and the issue price of the bonds are the same.

INVESTOR TRANSPARENCY

Pot issues generally require syndicate members who are putting orders in to the pot to disclose the names of their investors, either to the Bookrunner, or, if the issuer is managing a strategic reserve, to the issuer. The IPMA Recommendation states that any requirements to disclose investor names must be described clearly before invited managers have accepted their invitation to join the syndicate. Occasionally small orders are accepted from managers who have an investor who does not want his or her name disclosed for confidentiality or bank secrecy reasons (so-called Account X orders).

INVESTOR ORDERS AND ALLOCATION

Investors may place orders with each Bookrunner and/or syndicate member with whom they have a relationship. This is a recognised market practice.

There are no consistently applied conventions for placing and filling multiple orders, and an order of 6 million left with each of three Bookrunners may be interpreted as total investor interest of 18 million, or total investor interest of 6 million. Investors need to state clearly their total level of interest when leaving multiple orders, and Bookrunners need to be sure they understand the basis on which multiple orders have been placed before allocating bonds.

SETTLEMENT

Bonds are allocated to investors and, where relevant, managers, within a short time of deal pricing, usually 24 hours. Managers who bring orders in to an incentive pot typically settle the allocation they receive from the incentive pot directly with their investors. The Bookrunner responsible for settling the issue (Settlement Manager or Billing and Delivery Manager) is expected to pay fees to syndicate and selling group members on the payment (closing) date of the issue. If there are retention bonds, managers with retention bonds may be instructed to deduct their fees from the payment they make to the Settlement Manager. Instructions for

payment are included in the Invitation or Allotment notice. If an issue consists of more than one tranche, there may be more than one Settlement Manager.

HEDGING

In a typical pot deal, one of the Bookrunners may arrange the hedging for the pot bonds which are settled through the Settlement Manager.

SECONDARY TRADING

Bookrunners will usually provide liquidity in the new issue, in normal market conditions. Bookrunners do not run a joint secondary book, and there is generally no investor name give–up in the secondary market.

XIII. PRE-SOUNDING, BOOKBUILDING AND ALLOCATIONS

1. The purpose of this explanatory memorandum is to provide some practical information on investor meeting, pre-sounding, bookbuilding and allocation processes (and related disclosure), as often used in the prevalent 'pot' context of the European cross-border syndicated institutional primary debt markets today. Market practice in this area is continually evolving and individual transactions are structured according to their specific circumstances, so this memorandum is not intended to prescribe or endorse particular structures or practices. Rather it is intended to be both a document designed to enhance transparency for, and serve as a helpful point of reference to bookrunners when explaining their working practices to, colleagues, issuers and investors. Some markets (notably in the US) may operate in ways different to those outlined here.

2. Bookrunners of new bond issues seek to ensure transactions are executed as smoothly and as efficiently as possible, whilst meeting the issuer's size, pricing and distribution objectives (if any) and taking into account possible secondary market performance and an investor base willing to participate in this and subsequent transactions. Each bookrunner has internal procedures relating to the pre-sounding, bookbuilding and allocation process. These are applied to individual transactions, but may be tailored where appropriate to accommodate any issuer requirements, other bookrunner procedures and any specificities of the market segment concerned. In this respect, discussions with the issuer and between the individual bookrunners begin at an early stage and continue throughout the transaction.

INVESTOR MEETINGS

3. Many issuers, particularly in volatile times, focus on ensuring investor familiarity with their businesses in order to maximise their ability to take advantage of short and unpredictable issuance windows. This may include holding a series of meetings with investors that, unlike transaction-specific or 'deal' roadshows, are not intended to market a specific immediate transaction (though one might follow if particularly encouraged by investor feedback). Whilst issuers should not communicate material non-public or inside information concerning their businesses in such meetings (focusing rather on outlining published financials, issuance

programme prospectus, etc), notice of such meetings is generally publicly disseminated at the time participants are invited (including pursuant to ICMA Recommendation 1.32 in the case of infrequent issuers, who do not have publicly announced borrowing programmes). This helps address any participant concerns that knowledge of the mere scheduling alone of such meetings might subsequently be characterised as constituting material non-public or inside information of forthcoming issuance under the EU's Market Abuse Directive or similar regulatory regimes.

PRE-SOUNDING

4. In certain market conditions (for example where there is high volatility and uncertainty and the issuer and the bookrunners are looking for confirmation of pricing rationale), seeking initial feedback from a small number of investors, representative of the issuer's targeted investor base, may help the bookrunners in assessing the depth of demand and formulating appropriate initial price guidance, and so help guide the terms of the transaction ahead of a public announcement. In some cases, sufficient feedback may be obtained through disclosing general information not amounting to material non-public or inside information. In other cases, this may be insufficient and more specific information, potentially amounting to material non-public or inside information, might need to be disclosed. In such cases, the bookrunners carrying out the sounding will initially seek the consent of the investors they wish to approach by indicating that they wish to sound them for a potential transaction on the basis of information that may amount to material non-public or inside information and that the investors could, as a result, be subject to restrictions under laws and regulations applicable to the possession of such information (including restrictions on trading in related securities) – i.e. indicating that the investor is to be 'wallcrossed'. This may be understandably problematic for some of the investors concerned. Incidentally, records are generally required by law to be kept (e.g. of the persons who have been pre-sounded, of the time of the pre-sounding and of the information disclosed), and insider lists are to be updated. Such requirements are generally also incorporated into applicable compliance policies.

5. The interpretation of what constitutes inside information may differ. ICMA issued Recommendation 1.30 so that bookrunners may confer,

and hopefully agree, a uniform approach in the context of individual transactions (both as to whether information may be inside and as to the specific wallcrossing format). The views of the bookrunners however do not constitute legal advice and so cannot and should not be relied upon by the investors, who would need to consult their own compliance functions as to the potential status of the information and the potential scope of the restrictions (including their duration).

6. The practice of wallcrossing is naturally limited by investors' ability and willingness (if they consider the related advantages worthwhile)[1] to be approached in this way and to provide meaningful feedback. Some financial institutions may sound 'hypothetical' transactions for which no issuer mandate has been contemplated (and where by definition no inside information can arise) so as to build up a continuous stream of information for use if needed. Investors may also make 'reverse enquiries' – proactively contacting financial institutions to indicate interest in certain similarly hypothetical transactions.

INTERMEDIATE PRICE DISCOVERY – "INITIAL PRICE TALK"

7. Even following public announcements of transactions, issuers and bookrunners may at times have insufficient certainty as to likely pricing to be able to formally issue price guidance and open orderbooks (bearing in mind that investors expect price guidance, in very limited number of iterations, to be only tightened towards final pricing). If required by market conditions and absent sufficient prior investor feedback, bookrunners may implement an intermediate price discovery step following public announcement of the transaction. This involves public dissemination (recognised by ICMA Recommendation 1.32) of more tentative price indications, on which bookrunners then actively seek feedback. Such indications need to be clearly distinguished from formal price guidance (see further below) – this is because, unlike formal price guidance, they may involve several successive iterations that may widen as well as tighten. The designation generally used (and also recognised by ICMA Recommendation 1.32) is "initial price talk", though designations like "price discovery", "initial price thoughts" and "price level under discussion" are also sometimes used.

8. Generally, transactions for frequent issuers (with an established credit curve and documentation) move on an abbreviated timeline (and are less likely to involve roadshows or preliminary 'red herring' prospectuses) compared to transactions for inaugural and infrequent issuers.

9. In certain market conditions, with substantially more investor demand than supply, submission of investor orders can potentially exceed the proposed new issue size many times over in a very short timeframe, with orders for billions of euros or dollars submitted in just a few minutes in some extreme cases. Aside the general show of market confidence, the additional orders may not bring issuers any material advantage (with even a small amount of oversubscription being sufficient for any desired increase of the initial anticipated size). Aside from further reducing individual allocations, this level of oversubscription can delay the allocation process (extending the parties' uncertainty and potential exposure to market risk). A swift closing of the orderbook helps address this, but may leave some investors aggrieved at not having had sufficient time to place orders reflecting their full demand. Issuers may even face a situation where interest expressed during roadshows alone exceeds the proposed new issue size. These challenges have tended to occur in the context of non-financial corporate issuance rather than in the context of issues by sovereigns, supranational institutions, international agencies or financial institutions.

10. Timing may present a challenge for some investors in that they may, for example, need to review their knowledge of the relevant transaction documentation, obtain credit approvals or to consult colleagues internally to consolidate interest stemming from several sub-funds (potentially across several time zones). There will also be different reaction speeds amongst a broad range of investors. In terms of documentation, frequent issuers (the majority of the market) usually issue off programmes, whilst inaugural or infrequent issuers usually come to market with preliminary 'red herring' prospectuses – in both cases published in advance of opening of the orderbooks. For investor convenience however (and also pursuant to ICMA Recommendation 1.32), bookrunners generally attach, or include links to, the relevant documentation to or in transaction announcements (or make it available through their orderbook management system). Regular participation in an issuer's roadshows and other investor-facing

communication efforts should also assist in investors being kept up to date, in advance of the new transactions, on developments regarding that issuer and so in being ready to participate. In this respect, the few investors participating in any transaction pre-sounding may not be better placed to submit orders on a timely basis.

11. In order to address the above, and with investors currently seeming to favour the ability to place orders over the potential for delayed and reduced allocations, many bookrunners are generally keeping orderbooks open, unless otherwise agreed by the issuer, for a minimum period of one hour from the formal announcement of the transaction. This is reflected in ICMA Recommendation 1.32.

BOOKBUILDING – PRICE GUIDANCE

12. Some form of pricing information is required for investors to be able to decide what, if any, orders to place. Generally, bookrunners will open orderbooks after issuing initial price guidance. Even with prior feedback from a pre-sounding process, the guidance may need to be amended to reflect market conditions and response, with one or more iterations needed to identify the optimum pricing point. Essential to keeping this process efficient and to minimising the number of iterations (pursuant to investor expectations as noted above), is that investors give clear commentary as to the extent, and limits, of their demand by reducing or cancelling their orders at specific pricing levels and/or deal sizes they consider will be unacceptable. Distinctly, issuers faced with 'inflated' orderbooks (see further below) risk being misled into seeking pricing tighter than the market is able to absorb, which may lead to transactions performing poorly in the post launch market. It is for this reason that bookrunners seek to 'scrub' books ahead of allocation, as described below.

ALLOCATION

13. Orders on a new issue may exceed the issuer's initially planned size. In some cases, the issuer may decide to increase the issue size, but, notwithstanding this, orders may even exceed any such increase. Issuers generally have very clear objectives for the amount they wish to borrow in advance of any deal announcement. These views are unlikely to be materially changed by the size of an orderbook. The challenge

for bookrunners is firstly to reconcile (e.g. identify duplication) and consolidate the various orders (as books are generally built through several participating banks), secondly to establish true demand (as opposed to apparent demand) and thirdly to allocate the transaction in as efficient and fair a way as possible.

14. On the first aspect, efficiencies are being sought through increased automation with bookrunners increasingly connecting their orderbook management systems in a manner enabling unique investor identification.

15. The second aspect is complex. An investor might place an order larger than its true internal demand (order 'inflation') if, for example, it (i) anticipates that its order will be reduced on allocation because of oversubscription, (ii) overestimates demand that it was unable to confirm internally prior to placing its order, or even (iii) anticipates particularly strong demand by other investors and so expects to liquidate part of its allocation in initial secondary trading to crystallise the initial issuance premium ('flipping'). In this respect, it seems that some investors are unable or do not wish to inflate their orders, others appear to do so frequently, and yet others may do so just occasionally according to market conditions. Leaving aside how order inflation might be treated under applicable market abuse regulations, bookrunners may well apply a discount factor to, or even entirely exclude on allocation, orders they view as being potentially inflated (bookrunner views in this respect will *inter alia* account for previous experience with specific investors). Investor transparency to bookrunners is an important factor in avoiding mischaracterisation in this respect. In particular, investors may find it helpful to explain orders that (i) appear to be out of proportion compared to orders on previous transactions or to apparent assets under management, or (ii) are placed or increased at a relatively late stage during the launch process (and so appear to be based on perceived levels of demand rather than on transaction fundamentals). This later aspect is further complicated in that delayed demand may be due, as mentioned above, to investors legitimately needing to confer internally with colleagues managing sub-funds.

16. The third aspect is less complex, though 'scrubbed' final orderbooks are, despite the bookrunners efforts, not certain to be entirely inflation free. Aside any preference being given to specifically targeted investor groups (for example where an issuer is seeking to diversify its investor base), some preference may be given to long-term investors that (i)

have shown interest in the transaction, for example through actively participating in roadshows, investor update calls, etc., and/or (ii) have a history of investing in the issuer or its sector, and (iii) do not have a history of flipping. Helpful participation in the pre-sounding process may be rewarded by some prioritisation during allocations, though this is limited and seems to be insufficient for many investors to agree to being pre-sounded. A commercial relationship with other parts of bookrunners' firms is not a relevant consideration, being in any case restricted by regulation. Bookrunners frequently discuss their general allocations procedures with individual investors.

ORDERBOOK AND DISTRIBUTION DISCLOSURE

17. Investors should, and generally do, make their investment decisions on the basis of transaction 'fundamentals' (i.e. the issuer's business and the proposed terms of the issue) rather than 'technicals' (e.g. demand from other investors). Some investors may have understandable reasons for wanting to know levels of demand, and so seek disclosure of orderbook status. However, some investors also seek such information in order to magnify their orders where there is substantial oversubscription and so to improve the likelihood of securing individual allocations that, albeit reduced because of the oversubscription, match their true underlying demand (see further above on inflation of orders and principles of allocation).

18. Though individual bookrunners try to manage investor expectations whilst orderbooks are open, ultimately they will collectively agree, in the circumstances of individual transactions, what degree of disclosure is appropriate to be made before publicly disseminating it. This is reflected in ICMA Recommendation 1.32. Any such disclosure is required by law to be clear, fair and not misleading and issuers and bookrunners focus on ensuring any disclosure is representative of investor demand. This may result in a conclusion in individual cases that no information relating to the orderbook should be disclosed before the book closes. Distinctly, bookrunners may also seek (as one mitigant to order inflation) to limit disclosure of book size to just whether transactions are subscribed or not, without stating the scale of any oversubscription.

19. Investors' understanding of transactions ex-post may help moderate disappointments as to lower than expected allocations and, in this

respect, many bookrunners are seeking to distribute, where possible, deal statistics to investors via sales desks within 48 hours of pricing. However, in relation to post-transaction disclosure of distribution, ICMA published ICMA Press Statement 1 in February 2001 *inter alia* noting that there is no obligation to make such disclosure as a result of the then applicable Section 47 of the UK's Financial Services Act 1986. Any such disclosure of distribution, if made, will also be collectively agreed in advance by the bookrunners pursuant to ICMA Recommendation 1.32.

PUBLIC DISSEMINATION

20. Under the EU's market abuse rules, information ceases to be unpublished price-sensitive information once it has been made public in any way. Issuers are sometimes required to publish information using designated information services, and publishing information via those services can also constitute a 'safe harbour' from allegations of market abuse in relation to that information. Such safe harbour channels tend to be both national- and equity market-focused in scope and so might not be the most efficient or practical means to disseminate transaction-related information for the international bond markets. In the context of new bond issuance, bookrunners generally seek, where they can, to use any information channels that participants in the relevant market segment are reasonably expected to have access to. These channels might not necessarily be the above designated information services and/or free of charge. Such channels might also be used when publically disseminating information (e.g. the scheduling of investor meetings, initial price talk and investor demand as referred to in ICMA Recommendation 1.32) that might not necessarily otherwise constitute unpublished price-sensitive information.

Note

[1.] *Any comfort as to an issuer making, if needed, a public 'cleansing' statement to at least limit the duration of any potential investor restrictions could be a relevant consideration in this respect.*

SECTION SEVEN
ICMA STANDARD DOCUMENTATION AND STANDARD LANGUAGE

I: Standard Form Agreement Among Managers

Version 1: Fixed-Price Non Equity-Related Issues – with or without selling group – March 2004

French Law Schedule

German Law Schedule

New York Law Schedule

Version 2: Managers only Equity-Related Issues – April 2005

French Law Schedule

German Law Schedule

Version 3: *Withdrawn and replaced by Version 2 – April 2005*

II: (a) ICMA Pro Forma "Final Terms" and Pricing Supplement for Medium Term Note Programmes: Explanatory Memorandum

(b) Pro forma final terms for medium term note programmes for use in connection with issues of securities with a denomination of less than €50,000 to be admitted to trading on an EEA regulated market and/or offered to the public in the EEA

(c) Pro forma final terms for medium term note programmes for use in connection with issues of securities with a denomination of at least €50,000 to be admitted to trading on an EEA regulated market

(d) Pro forma final terms for medium term note programmes for use in connection with issues of securities admitted to trading on the UK Professional Securities Market

(e) Pro forma pricing supplement for medium term note programmes for use in connection with issues of securities which are not subject to the Prospectus Directive

III: ICMA Compliant Language for Actual/Actual interest calculations in euro-denominated fixed rate bond issues

IV: ICMA Standard Language for the EU Directive on the Taxation of Savings

V: Notice No. 2 on Contracts (Rights of Third Parties) Act 1999

VI: Standard Form Arrangement and Comfort Letters for Stand-Alone Bonds

VII: Standard Form Stabilising Agent Appointment Letter – ICMA Agency Terms: *Withdrawn September 2005*

VIII: Standard Collective Action Clauses (CACs) for the Terms and Conditions of Sovereign Notes

IX: Standard Form Selling Restrictions

A Debt (UK)

B Equity (EEA Prospectus Directive)

X: ICMA Standard Form ECP Documentation

(a) Dealer Agreement

(b) Information Memorandum

(b) Form of Multicurrency Global Note

XI: Market Abuse Directive – Stabilisation Safe Harbour

(a) Pre-Stabilisation Announcement

(b) Post-Stabilisation Announcement

(c) Stabilisation Legend

SECTION SEVEN
ICMA STANDARD DOCUMENTATION AND STANDARD LANGUAGE

I

Standard Form Agreement Among Managers

Version 1: Fixed-Price Non Equity-Related Issues – with or with selling group – March 2004

French Law Schedule

German Law Schedule

New York Law Schedule

Version 2: Managers only Equity-Related Issues – April 2005

French Law Schedule

German Law Schedule

Version 3: *Withdrawn and replaced by Version 2 – April 2005*

The circumstances in which each Agreement and the Schedules can be used are stated in explanatory notes preceding each Agreement.

AGREEMENT AMONG MANAGERS

Version 1
(Fixed-Price Non Equity-Related Issues –
with or without Selling Group)

EXPLANATORY NOTE
ICMA Standard Form Agreement Among Managers

A. The ICMA Standard Form Agreement Among Managers Version 1 is intended for use in fixed-price non-equity-related issues where there is no intention to charge stabilisation losses to the Managers, other than any Managers who are appointed stabilising agents. It also assumes that the ICMA Recommendation that cost overruns should not be charged to Managers, other than any Joint Bookrunners/Joint Lead Managers is to be followed. This Agreement caters for issues using a pot system. However, given the wide variety of pot systems used in the market, where a pot system is used care should be taken to ensure that the provisions of this Standard Form are consistent with the commercial arrangements of that pot system. Where modifications are required, they should be set out in the Invitation to Managers. This revision of Version 1 will apply in respect of all issues using Version 1 where the Invitation to Managers is sent on or after 1st March 2004, and replaces the previous revision to Version 1 which was valid for issues where the Invitation to Managers was sent on or after 19th May 2003.

B. This version of the ICMA Standard Form Agreement Among Managers contains provisions designed to deal with selling groups appointed by Joint Bookrunners/Lead Managers. ICMA Agreement Among Managers Version 2 (Managers and Separate Selling Group) is withdrawn with effect for issues where the Invitation to Managers is sent on or after 1st March 2004.

C. This version of the ICMA Standard Form Agreement Among Managers will be used when the Invitation to Managers contains the words:

Agreement Among Managers: ICMA Version 1.

D. In the request to each Manager to appoint authorised signatories to execute agreements on its behalf the following language should be inserted:

> *The execution of the Subscription Agreement by or on behalf of all parties will constitute your acceptance of the ICMA Agreement Among Managers Version 1 subject to any amendment notified to you in writing at any time prior to the earlier of the receipt by the Lead Manager or the Settlement Lead Manager of the document appointing your authorised signatory and the execution of the Subscription Agreement.*

The effect of adding these words is that each Manager will become bound by this version of the Standard Form Agreement Among Managers (with the appropriate variations) by virtue of having become bound by the Subscription Agreement.

If there are to be no Signing Authorities, because all Managers are to sign the Subscription Agreement, the Subscription Agreement (or some other contract to be signed between the Managers) should include a provision confirming acceptance of the ICMA Agreement Among Managers Version 1.

E. The Agreement contemplates that (except where all Securities are to be allocated out of a Pot) the Lead Manager or the Settlement Lead Manager will notify each Manager of the net amount due from it at Closing (i.e. after deduction of the fees due to it). []

F. The Agreement is suitable for issues where (a) the obligations of the Managers are to be joint and several and (b) the closing of the issue is to be through Euroclear Bank S.A./N.V. and/or Clearstream Banking société anonyme. It may also be used where other clearing systems are involved, as indicated in the Invitation to Managers. When the obligations of the Managers are not joint and several, amendments may be required to reflect arrangements between the Managers, for example, to deal with Managers' obligations to subscribe additional securities if a Manager defaults, if the provisions of Clause 3 do not reflect the commercial arrangements between the Managers.

G. The Agreement provides for the possibility that there may be more than one Lead Manager. There is no uniform practice in the market as to

how the roles typically associated with a sole Lead Manager are divided between (or shared by) joint Lead Managers. Accordingly, the Agreement assumes, by default, that, apart from the roles of Stabilising Manager and Settlement Lead Manager, the roles are to be carried out jointly, unless the Invitation to Managers or the Subscription Agreement indicate otherwise (see Clause 10). Where there is any conflict between the Subscription Agreement, the Invitation to Managers and this Agreement in relation to the roles of joint Lead Managers, the Subscription Agreement should prevail.

Care should be taken in identifying circumstances where it would be inappropriate for the powers to be exercised jointly. For example, if one of the joint Lead Managers is an affiliate of the Issuer, it would usually be inappropriate for that Lead Manager's consent to be required before an event of force majeure is deemed to have arisen.

H. The Agreement provides for contribution arrangements between Joint Bookrunners in certain circumstances. If different arrangements are to apply between the Joint Bookrunners for a specific transaction, the Joint Bookrunners should amend the provisions between themselves. This can be done by means of a separate agreement or letter and does not need to be disclosed in the Invitation to Managers.

I. As with any agreement, market participants are responsible for ensuring that the type and content of the Agreement Among Managers adopted for a particular transaction are appropriate in the circumstances.

J. This version is suitable for use whether or not there is a selling group. It assumes that, where there is a selling group, it is appointed by one or more of the Joint Bookrunners or Lead Manager(s) on its/their own behalf, not on behalf of the other Managers. The Joint Bookrunners/ Lead Manager(s) are responsible for the terms and documentation of any Selling Group arrangements. It also assumes that none of the Managers is a member of the Selling Group. Amendments will be required if any of these assumptions does not apply in a particular case.

K. This Explanatory Note does not form part of the Agreement Among Managers.

AGREEMENT AMONG MANAGERS VERSION 1

The Terms of the Agreement Among Managers in respect of each issue where this form of Agreement has been selected for use are as follows (subject, in the case of each Manager, to any amendment notified to that Manager in writing at any time prior to the time when the Signing Authority granted by that Manager to the Lead Manager to which such Signing Authority is being granted is received by it or, where no Signing Authority is granted by that Manager, the date on which that Manager signs the Subscription Agreement). Terms used in this Agreement have the meanings assigned to them in the attached Schedule. Where this Agreement Among Managers has been selected for use, it is conditional upon and will take effect upon the execution of the Subscription Agreement for the relevant issue of Securities.

1. OFFERING

Except where there is a Pot relating to all of the Securities, the Managers confirm that the Settlement Lead Manager, as agent of the Issuer, has offered or will offer all or some of the Securities to Managers for subscription or purchase in the amounts already notified to each Manager by the Settlement Lead Manager.

2. UNDERWRITING

The Securities will as between the Managers be severally underwritten by the Managers in the amounts set out in the Commitment Notification.

3. SUBSCRIPTION

If there is a Defaulter:

(1) where the Default Securities were sold out of a Pot:

(a) the Settlement Lead Manager will promptly notify the other Joint Bookrunners (if any) of the amount of the Default Securities;

(b) the Settlement Lead Manager may require the Joint Bookrunner(s) or Manager(s) who proposed that Defaulter for inclusion in the Pot to subscribe or purchase those Default Securities. If more than one Joint Bookrunner or

Manager proposed that Defaulter for inclusion in the Pot, any requirement by the Settlement Lead Manager under this paragraph shall be made on a basis that is *pro rata* to the amount of the orders brought by each such Joint Bookrunner or Manager

(2) where the Defaulter is a member of a Selling Group or a person nominated by a Selling Group member, the Lead Manager or the Joint Bookrunner who appointed the relevant Selling Group member to the Selling Group shall subscribe or purchase those Default Securities. If the appointment was made by more than one such person, the subscription or purchase shall be made on a basis that is pro rata to their Commitments

(3) where the Default Securities were allotted to a Manager, the Settlement Lead Manager may require each non-defaulting Manager who has agreed to subscribe or purchase Securities as a result of offers described in Clause 1 in a principal amount which is less than its Commitment, to subscribe or purchase additional Securities, but so that no non-defaulting Manager shall, under this paragraph (3) and as a result of offers accepted by it as described in Clause 1 be obliged to subscribe or purchase a principal amount of Securities in excess of its Commitment. In exercising its rights under this paragraph, the Settlement Lead Manager shall allocate Securities to each non-defaulting Manager to whom the paragraph applies in proportion to their Commitments, subject to paragraphs (6) and (7)

(4) if any Default Securities remain to be subscribed or purchased after the application of paragraph (1) and/or (2) and/or (3), the Settlement Lead Manager may require each of the non-defaulting Managers to subscribe or purchase such Default Securities in proportion to their Commitments

(5) if any non-defaulting Manager defaults in its obligation to subscribe or purchase any Default Securities under paragraph (4), the provisions of paragraph (4) will apply in respect of the other non-defaulting Managers to such Default Securities

(6) the Settlement Lead Manager may adjust the amount of Securities it requires any Manager to subscribe or purchase under this

Clause up or down to such extent as it may deem expedient and equitable so as to ensure that no Manager is required to subscribe or pay for a fraction of any Security

(7) as an alternative and/or in addition to paragraphs (1) and/or (2) and/or (3) and/or (4) and/or (5), the Joint Bookrunner(s) or (if none) the Settlement Lead Manager may, in its/their absolute discretion, subscribe or purchase any Default Securities to which this Clause applies and/or offer them to any person (whether or not a Manager) or retain them for its/their own account. Where the Joint Bookrunners subscribe or purchase Default Securities pursuant to this paragraph (7) in any issue where there is a Pot they shall do so in the same proportion as they share the underwriting fees relating to the Default Securities within the Pot (unless they agree otherwise)

(8) any Default Securities to which this Clause relates will be subscribed or purchased (unless the only subscribers or purchasers are the Joint Bookrunners and they agree otherwise)

(a) where the Defaulter was a Selling Group member, at the Selling Price

(b) (where the Default Securities were allocated out of a Pot) at the Reoffer Price and

(c) in any other case at the Selling Price, but after deduction of the defaulting Manager's Combined Commission (if any) divided among the non-defaulting Managers (or, in the case of paragraph (7), the Joint Bookrunner(s) or (if none) the Settlement Lead Manager)

plus, in each case, an amount determined by the Settlement Lead Manager in its absolute discretion as being the proportion attributable to such Default Securities of the cost of borrowing the funds necessary to make payment for the Default Securities to the Issuer on the Closing Date and of any other costs associated with the default in relation to the Default Securities.

4 . AUTHORITY TO LEAD MANAGER

Each of the Managers authorises (in the case of sub-paragraphs (1) and (2)) the Settlement Lead Manager and (in the case of sub-paragraph

(3)) the Lead Manager as its agent and on its behalf to do whatever that Manager is (or all the Managers together are) required or entitled to do under the Subscription Agreement including:

(1) entering into such arrangements with Euroclear Bank S.A./ N.V. and Clearstream Banking société anonyme or such other clearing system as may be specified for closing of the issue in the Invitation to Managers (or the entities through whom they act) as the Settlement Lead Manager reasonably believes to be appropriate to effect payment for and delivery of the Securities or the Global Instrument delivered in respect of the Securities

(2) borrowing for the account of the Managers, for their several accounts in proportion to their respective Commitments, such sum as may be necessary in order that payments due to the Issuer and the Managers can be effected as specified in the Subscription Agreement and the Settlement Lead Manager may pay interest at then current rates

(3) waiving compliance with any of the conditions referred to in the Subscription Agreement in respect of which the right of waiver is reserved.

As an alternative to borrowing under paragraph (2), the Settlement Lead Manager may as principal lend, and may charge interest at then current rates on, such sums as are referred to in that paragraph mutatis mutandis on the terms of that paragraph.

Any amounts due from any Manager as a result of any borrowing made on its behalf, or any loan to it, will be paid forthwith upon demand.

5. STABILISATION

(a) Stabilising Manager

Each Manager acknowledges that the Stabilising Manager is appointed stabilising manager for the Stabilisation Securities. However, this Clause does not authorise the Stabilising Manager to carry out stabilisation and/ or over-allotment transactions on behalf of the Managers. Any such transactions shall be for the Stabilising Manager's own account (or that of the Lead Manager, if so agreed with the Stabilising Manager), or, if there are joint Lead Managers or

Joint Bookrunners who have been appointed stabilising agent, for the account of each of them and the Stabilising Manager, pro rata to their Commitments, and shall be effected in accordance with applicable laws.

(b) Non-Stabilisation Agreement

No Manager other than the Stabilising Manager (and any lawful agent appointed by it) will effect any transactions (whether in the open market or otherwise) with a view to stabilising or maintaining the market price of the Stabilisation Securities at levels other than those which might otherwise prevail.

6. EXPENSES

(a) Retention

The amount paid by the Issuer or the Guarantor in respect of Managers' expenses shall be retained by the Lead Manager for its own account, or for the account of the Joint Bookrunners, if so agreed between them. The other Managers will not be reimbursed for any of their expenses in connection with the issue of the Securities.

(b) Expenses on Termination

If the obligations of the Managers under the Subscription Agreement to subscribe or purchase the Securities are terminated, the Managers who are Joint Bookrunners or joint Lead Managers agree to contribute in proportion to their respective Commitments in meeting any direct out-of-pocket expenses incurred by the Lead Manager, and/or Joint Bookrunners if Clause 6 (a) applies, which are not recoverable and/or are not recovered from the Issuer or the Guarantor under the Subscription Agreement.

7. TERMINATION

If any Manager wishes to terminate its obligations to subscribe or purchase the Securities under the Subscription Agreement, it shall consult with the Lead Manager who shall, to the extent the Lead Manager considers reasonably practicable, consult with the other Managers. The Lead Manager may in any event, on behalf of the Managers and in its sole discretion, give notice of such termination to the Issuer in accordance with the terms of the Subscription Agreement and shall not be responsible

to any Manager for any consequences resulting from any such notice. No other Manager may give any such notice and the Lead Manager may not be required to give, or not to give, such notice.

8. PARTNERSHIP

None of the provisions of this Agreement or any other agreement relating to the Securities shall constitute or be deemed to constitute a partnership or joint venture between the Managers or any of them, or between them (or any of them) and anyone else, and, except as specifically provided, none of the Managers shall have any authority to bind any other Manager in any way.

9. CONTRIBUTION BETWEEN JOINT BOOKRUNNERS

(1) This Clause applies:

(a) unless the Joint Bookrunners agree that it shall not apply and

(b) subject to any amendments agreed in writing between the Joint Bookrunners.

(2) No Joint Bookrunner shall be liable to make a contribution in respect of any claim or proceeding under this Clause to any other Joint Bookrunner;

(a) to the extent that the claim or proceeding is made by a regulatory or supervisory body by which the Joint Bookrunner requiring a contribution is authorised or regulated, in respect of a breach of the rules or regulations of that body by such Joint Bookrunner;

(b) to the extent that the claim or proceeding relates to a breach by the Joint Bookrunner requiring a contribution of the Subscription Agreement or any other agreement relating to the issue of the Securities; or

(c) where that other Joint Bookrunner is also the Issuer or Guarantor or any entity in the Issuer's or Guarantor's group.

(3) Subject to the other paragraphs of this Clause, each Joint Bookrunner agrees with the other(s), whether or not the Securities shall have been issued and settlement made of all other rights

and obligations under this Agreement, to contribute pro rata to its Commitment (without regard to the limits set out in Clause 6(b)) towards:

(a) all expenses incurred by any Joint Bookrunner and not reimbursed by the Issuer or the Guarantor or any other person in investigating or defending any claim or proceeding which is asserted or commenced by any party (including any governmental or regulatory body) in connection with the issue and offering of the Securities and

(b) any liability, including legal fees, incurred by any Joint Bookrunner in respect of any such claim or proceeding, whether such liability shall be the result of a judgment or of any settlement agreed by that Joint Bookrunner.

(4) No Joint Bookrunner shall be entitled to any contribution under this Clause if it has, without the agreement of the other Bookrunner(s), taken any action or engaged in any course of conduct that may have a substantial adverse effect on the outcome of any such claim or proceeding.

(5) Where any such claim or proceeding is brought against any of the Joint Bookrunners, the Joint Bookrunners shall retain legal advisers reasonably satisfactory to all of them to represent the person against whom the claim or proceeding is brought and each Joint Bookrunner shall pay a share, on a basis pro rata to its Commitment, of the fees and expenses of such legal advisers related to such claim or proceeding. In any such claim or proceeding, any Joint Bookrunner shall have the right to retain its own legal advisers, but the fees and expenses of such legal advisers shall be the liability of such Joint Bookrunner unless any of the following circumstances occur in which case they shall be the liability of all of the Joint Bookrunners, on a basis pro rata to their Commitments:

(a) the Joint Bookrunners have failed within a reasonable time to agree on the legal advisers to be retained or

(b) representation of all Joint Bookrunners by the same legal advisers would be inappropriate due to actual or potential differing interests between them.

(6) No Joint Bookrunner shall be liable for any settlement of any claim or proceeding effected without its written consent, but if settled with such consent or (subject to paragraph (2)) if there be a final judgment for the plaintiff, the Joint Bookrunners agree to share on a basis pro rata to their Commitments any loss or liability by reason of such settlement or judgment. No Joint Bookrunner shall, without the prior written consent of the other Joint Bookrunners, effect any settlement of any pending or threatened claim or proceeding in respect of which any other Joint Bookrunner is or could have been a party and payment could have been sought hereunder from that other Joint Bookrunner, unless such settlement includes an unconditional release of such other Joint Bookrunner from all liability in respect of the subject matter of such claim or proceeding.

(7) This Clause shall override any other provision in any other contract relating to the issue of the Securities to which the Joint Bookrunners are parties, to the extent that it is inconsistent with any such other provision.

10. JOINT LEAD MANAGERS

Where there is more than one Lead Manager or Joint Bookrunners, any reference in this Agreement to the "Lead Manager" shall be construed:

(a) where any activity is expressed in the Invitation to Managers or the Subscription Agreement to be exercisable by one or more of the Lead Managers or Joint Bookrunners, as a reference, in relation to that activity, to that/those Lead Manager(s) or Joint Bookrunner(s) and

(b) in all other cases, as a reference to each of the Lead Managers or Joint Bookrunners and so that any right, discretion or authority shall be carried out by them jointly.

Where there is any conflict between the Subscription Agreement, the Invitation to Managers and this Agreement in relation to the roles of joint Lead Managers or Joint Bookrunners, the Subscription Agreement will prevail.

11. MONEY LAUNDERING

The Settlement Lead Manager confirms that

(a) it has taken or will take all appropriate action required, under the law and regulations applicable to it implementing Council Directive No 91/308/EEC concerning prevention of money laundering, in relation to the identification of the Issuer and those acting on its behalf, for the purposes of the issue of the Securities or if no such laws or regulations apply, appropriate action equivalent to the requirements under Council Directive No 91/308/EEC; and

(b) it will provide any Manager on request with certified copies of the relevant underlying evidence of identification of the Issuer and those acting on its behalf for the purposes of the issue of the Securities, as aforesaid.

In taking such action as it deems appropriate, the Settlement Lead Manager accepts no liability for any direct or indirect loss to the Managers in relation to any action taken by it under this Clause.

12. SURVIVAL OF RIGHTS

Completion of the subscription or purchase of the Securities by the Managers shall not terminate any rights which any party may have under this Agreement, which shall continue in full force and effect.

13. GOVERNING LAW AND JURISDICTION

This Agreement, as to which time shall be of the essence, shall be governed by and construed in accordance with English law. With respect to any suit, action or proceedings relating to this Agreement ("**Proceedings**"), each party irrevocably submits to the jurisdiction of the English courts and waives any objection which it may have at any time to the laying of venue of any Proceedings brought in any such court, waives any claim that such Proceedings have been brought in an inconvenient forum and further waives the right to object, with respect to such Proceedings, that such court does not have jurisdiction over such party.

Nothing in this Agreement precludes any party from bringing Proceedings in any other jurisdiction (outside the Contracting States, as defined in

Section 1(3) of the Civil Jurisdiction and Judgments Act 1982 or any modification, extension or re-enactment thereof for the time being in force) nor will the bringing of Proceedings in any one or more jurisdictions (outside the Contracting States) preclude the bringing of Proceedings in any such other jurisdiction.

SCHEDULE

Closing Date	The date defined as such in the Subscription Agreement.
Combined Commission	The combined management and underwriting commission set out in the Invitation to Managers.
Commitments	The amounts severally underwritten by the Managers as set out in the Commitment Notification.
Commitment Notification	The telex, fax, electronic message or other document notifying each Manager by or on behalf of the Lead Manager of that Manager's underwriting commitment.
Defaulter	Any person to whom Securities have been allotted for subscription or purchase and who defaults on that obligation, or whom the Settlement Lead Manager in its absolute discretion believes will so default.
Default Securities	In relation to any Defaulter, the Securities in respect of which it has defaulted, or the Settlement Lead Manager believes it will default.
Guarantor	The Guarantor, if any, of the issue.
Global Instrument	Includes any global instruments to be delivered by the Issuer, as provided for in the Subscription Agreement.
Invitation to Managers	The telex, fax, electronic message or other document inviting each Manager to participate in the issue.
Issuer	The issuer of the Securities.
Joint Bookrunners	The Managers (if any) identified as such in the Invitation to Managers or the Subscription Agreement.
Lead Manager	The Manager expressed to be the Lead Manager in the Invitation to Managers or as notified by any subsequent telex, fax, electronic message or other document.
Managers	The parties named as such in the Subscription Agreement.

Pot	The amount of Securities that instead of being allotted to the Managers is sold by the Settlement Lead Manager to purchasers whose names and orders are given to it by the Managers, Selling Group members or the Issuer.
Reoffer Price	The price defined as such in the Invitation to Managers or, if none, means the price below which the Managers were told they should not reoffer the Securities until notified otherwise.
Securities	The securities to be issued as described in the Invitation to Managers.
Selling Group	The group consisting of certain entities (other than the Managers) appointed by the Lead Manager or Joint Bookrunner(s) or any of them on its/their own behalf.
Selling Price	The price at which the Managers agree to subscribe or purchase the Securities under the Subscription Agreement (that is, the gross issue price less any selling concession or commission).
Settlement Lead Manager	The Lead Manager or, if there is more than one Lead Manager, the Lead Manager so specified in the Invitation to Managers or, if none, the Manager who makes arrangements for the issue and payment of the Securities with the clearing system or systems.
Signing Authority	The document from a Manager which purports to appoint an authorised attorney or signatory to execute the Subscription Agreement.
Stabilisation Securities	The securities in respect of which the right to carry out stabilising action has been reserved in any circular or prospectus either pursuant to the Conduct of Business Rules of the Financial Services Authority, or otherwise in accordance with any applicable law or regulation.

Stabilising Manager The person identified as having the right to stabilise the Stabilisation Securities in any circular or prospectus either pursuant to the Conduct of Business Rules of the Financial Services Authority, or otherwise in accordance with any applicable law or regulation.

Subscription Agreement The agreement (sometimes called an "underwriting agreement", "terms agreement" or "purchase agreement") between the Issuer, the Guarantor (if appropriate), the Lead Manager and the other Managers setting out the terms and conditions upon which the Managers agree to subscribe the Securities.

AGREEMENT AMONG MANAGERS

FRENCH, GERMAN AND NEW YORK LAW SCHEDULES

AGREEMENT AMONG MANAGERS

French Law Schedule
Version for Issues Governed by French Law
(Non Equity-Related Issues)

The following Clauses amend the Clauses of the same numbers in Version 1 of the Agreement Among Managers so that the Agreement can be applied to issues governed by French law. Apart from these amendments, the French Law Version 1 of the Agreement Among Managers is identical to the English Law version reproduced in full in this ICMA Primary Market Handbook. Where a French Law Version of the Agreement Among Managers is used, the Agreement Among Managers can be designated *French Version 1*, as appropriate. This Version applies to issues for which the Invitation to Managers is sent on or after 1st March 2004.

Clause 1

Delete the words *as agent of the Issuer,*

Clause 3(7)

Delete the words *in its/their absolute discretion*.

Clause 3(8)

Delete the words *in its absolute discretion.*

Clause 4(1)

This Clause should read as follows:

(1) entering into such arrangements with Euroclear France, or, if applicable, Euroclear Bank S.A./N.V. and Clearstream Banking sociéte anonyme, or such other clearing system as may be specified for closing of the issue in the Invitation to Managers (or the entities through whom they act) as the Settlement Lead Manager reasonably believes to be appropriate to effect payment for, and credit or delivery, as appropriate, of the Securities or the Global Instrument delivered in respect of the Securities.

Clause 7

Delete the words *in its sole discretion*.

Clause 8

This Clause should read as follows:

> *8.* ***PARTNERSHIP***
>
> *None of the provisions of this Agreement or any other agreement relating to the Securities shall constitute or be deemed to constitute a partnership, joint venture or other foreign legal institution between the Managers or any of them, or between them (or any of them) and anyone else, and, except as specifically provided, none of the Managers shall have any authority to bind any other Manager in any way.*

Clause 13

Delete Clause 13 and insert the words:

> *This Agreement shall be governed by and construed in accordance with French law. The parties agree that the Paris Tribunal de Commerce shall have jurisdiction to settle any disputes which may arise out of or in connection with this Agreement. To the extent permitted by applicable laws and treaties, each party reserves the right to waive the benefit of this provision and to take proceedings in any other court of competent jurisdiction.*

Schedule

Delete the Definition of Global Instrument and insert the amended definition:

Global Instrument	*Includes any instrument or certificate to be delivered by the Issuer in respect of the Securities*

AGREEMENT AMONG MANAGERS

German Law Schedule
Version for Issues Governed by German Law
(Non Equity-Related Issues)

The following Clause amends the Clause of the same number in Version 1 of the Agreement Among Managers so that the Agreement can be applied to issues governed by German law. Apart from this amendment, the German Law Version 1 of the Agreement Among Managers is identical to the English Law version reproduced in full in this ICMA Primary Market Handbook. Where a German Law Version of the Agreement Among Managers Version 1 is used, the Agreement Among Managers can be designated *German Version 1*. This Version applies to issues for which the Invitation to Managers is sent on or after 1 March 2004.

German Law Version 1 can be used irrespective of whether or not the obligations of the Managers under the Subscription Agreement are several, but not joint or joint and several. Where the obligations of the Managers under the Subscription Agreement are several, use of German Law Version 1 means in effect that any Manager may be required to subscribe or purchase Defaulted Securities allotted to it under Clause 3, in addition to its Commitment.

Clause 13

Delete Clause 13 and insert the words:

> *This Agreement shall be governed by and construed in accordance with the law of the Federal Republic of Germany. The courts of Frankfurt am Main, Federal Republic of Germany, shall have non-exclusive jurisdiction over any dispute arising under or in connection with this Agreement and each party irrevocably submits to the jurisdiction of such German courts.*

AGREEMENT AMONG MANAGERS

New York Law Schedule
Version for issues Governed by New York Law
(non-equity related issues)

The following Clauses amend the Clauses of the same numbers in Version 1 of the Agreement Among Managers so that the Agreement can be applied to issues governed by New York law. Apart from these amendments, the New York law Version 1 of the Agreement Among Managers is identical to the English law Version 1 reproduced in full in this ICMA Primary Market Handbook. When the New York law version is used, the Agreement Among Managers can be designated *New York Version 1*. This Version applies to issues for which the Invitation to Managers is sent on or after 1 March 2004.

Clause 1

Delete the words "*, as agent of the Issuer,*"

Clause 13

Delete Clause 13 and insert:

> *This Agreement shall be governed by and construed in accordance with the law of the State of New York applicable to agreements made and to be performed in said State. With respect to any suit, action or proceeding relating to this Agreement ("Proceedings"), each party irrevocably consents to submit to the non-exclusive jurisdiction of the courts of the State of New York sitting in The City of New York, Borough of Manhattan and Federal courts sitting therein and, to the fullest extent that it may do so, waives (i) any objection which it may have at any time to the laying of venue of any Proceedings brought in any such court, (ii) any claim that such Proceedings have been brought in an inconvenient forum and (iii) the right to object, with respect to such Proceedings, that such court does not have*

jurisdiction over such party. Nothing in this Agreement precludes any party from bringing Proceedings in any other jurisdiction, nor will the bringing of Proceedings in any one or more jurisdictions preclude the bringing of Proceedings in any such other jurisdiction.

Clause 8

Delete Clause 8 and insert:

None of the provisions of this Agreement or any other agreement entered into in connection with the issuance of the Securities shall constitute or be deemed to constitute a partnership for any purpose between the Managers or any of them or between them (or any of them) and anyone else, nor shall any of the Managers treat (or take any position that treats) the provisions of this Agreement or any other agreement entered into in connection with the issuance of the Securities as a partnership for any other purposes, and except as specifically provided, none of the Managers shall have any authority to bind any other Manager in any way.

AGREEMENT AMONG MANAGERS

Version 2
(Managers Only Equity-Related Issues)

EXPLANATORY NOTE
ICMA Standard Form Agreement Among Managers

A. The ICMA Standard Form Agreement Among Managers Version 2 is intended for use in equity-related issues. It assumes that cost overruns and stabilisation losses will be charged to members of the syndicate, subject to a cap on clawback of total fees due to each such syndicate member. Where modifications are required, they should be set out in the Invitation to Managers. This Version 2 will apply in respect of all issues using Version 2 where the Invitation to Managers is sent on or after 16 May 2005, and replaces previous Version 3.

B. ICMA Standard Form Agreement Among Managers Version 2 may be adopted without the need for signature through the Invitation to Managers (see C below) or may be created as an issue specific agreement to be signed by or on behalf of all syndicate members, at the Lead Manager's choice. It will be used when the Invitation to Managers contains the words:

> *Agreement Among Managers: ICMA Version 2.*

C. If Version 2 is to be adopted through the Invitation to Managers without the need for signature, the request to each Manager to appoint authorised signatories to execute agreements on its behalf should include the following language:

> *The execution of the Subscription Agreement by or on behalf of all parties will constitute your acceptance of the ICMA Agreement Among Managers Version 2, subject to any amendment notified to you in writing at any time prior to the earlier of the receipt by the Lead Manager of the document appointing your authorised signatory and the execution of the Subscription Agreement.*

The effect of adding these words is that each Manager will become bound by this version of the Standard Form Agreement Among Managers (with the appropriate variations) by virtue of having become bound by the Subscription Agreement.

If there are to be no Signing Authorities, because all Managers are to sign the Subscription Agreement, the Subscription Agreement (or some other contract to be signed between the Managers) should include a provision confirming acceptance of the ICMA Agreement Among Managers Version 2.

D. The Agreement is suitable for issues where (a) the obligations of the Managers in the Subscription Agreement are to be several and (b) the closing of the issue is to be through Euroclear Bank S.A./N.V. and/or Clearstream Banking société anonyme. It may also be used where other clearing systems are involved, as indicated in the Invitation to Managers. If the obligations of the Managers are joint and several, amendments may be required to reflect arrangements between the Managers, for example, to deal with Managers' obligations to subscribe additional securities if a Manager defaults.

E. The Agreement provides for the possibility that there may be more than one Lead Manager. There is no uniform market practice as to how the roles typically associated with a sole Lead Manager are divided between (or shared by) joint Lead Managers. Accordingly, the Agreement assumes, by default, that the roles are to be carried out jointly, unless the Invitation to Managers or the Subscription Agreement indicate otherwise (see Clause 12). Where there is any conflict between the Subscription Agreement, the Invitation to Managers and this Agreement in relation to the roles of joint Lead Managers, the Subscription Agreement should prevail.

Care should be taken in identifying circumstances where it would be inappropriate for the powers to be exercised jointly. For example, if one of the joint Lead Managers is an affiliate of the Issuer, it would usually be inappropriate for that Lead Manager's consent to be required before an event of force majeure is deemed to have arisen.

F. If Version 2 is to be signed by the Managers, the first sentence in the preamble to Clause 1 of the Agreement will need to be replaced. The following is suggested alternative language:

This Agreement dated [ ] is entered in to between [ ] on the following terms.

The definition of Signing Authority which appears in the Schedule will need to be deleted.

G. Lead Managers may wish to consider if it is desirable in the cirumstances of any particular transaction to include provisions in this Agreement for an agent for service of process.

H. As with any agreement, market participants are responsible for ensuring that the type and content of the Agreement Among Managers adopted for a particular transaction are appropriate in the circumstances.

I. This Explanatory Note does not form part of the Agreement Among Managers.

AGREEMENT AMONG MANAGERS VERSION 2

The Terms of the Agreement Among Managers in respect of each issue where this form of Agreement has been selected for use are as follows (subject, in the case of each Manager, to any amendment notified to that Manager in writing at any time prior to the time when the Signing Authority granted by that Manager to the Lead Manager to which such Signing Authority is being granted is received by it or, where no Signing Authority is granted by that Manager, the date on which that Manager signs the Subscription Agreement). Terms used in this Agreement have the meanings assigned to them in the attached Schedule. Where this Agreement Among Managers has been selected for use, it is conditional upon and will take effect upon the execution of the Subscription Agreement for the relevant issue of Securities.

1. OFFERING

On the date of this Agreement, the Managers will execute and enter into a Subscription Agreement with the Issuer (and any Guarantor). Under the terms of such Agreement, the Managers agree to subscribe or purchase the Securities.

2. UNDERWRITING

The Securities will as between the Managers be severally underwritten by the Managers in the amounts set out in the Subscription Agreement.

3. SUBSCRIPTION

If any Manager defaults in its obligations to subscribe or purchase any amount of Securities, or if the Lead Manager in its absolute discretion believes that any Manager will so default:

(1) the Lead Manager may require each non-defaulting Manager who has agreed to subscribe or purchase Securities in a principal amount that is less than its Commitment, to subscribe or purchase additional Securities, but so that no non-defaulting Manager shall, under this paragraph (1) be obliged to subscribe or purchase a

principal amount of Securities in excess of its Commitment. In exercising its rights under this paragraph, the Lead Manager shall allocate Securities to the non-defaulting Managers to which the paragraph applies in proportion to their Commitments, subject to paragraphs (3) and (4).

(2) if any Securities remain to be subscribed or purchased after the application of paragraph (1) the Lead Manager may require the non-defaulting Managers to subscribe or purchase such Securities in proportion to their Commitments, but so that no non-defaulting Manager shall, under this paragraph (2), be obliged to subscribe or purchase a principal amount of Securities in excess of the Additional Percentage of its Commitment.

(3) the Lead Manager may adjust the amount of Securities it requires any Manager to subscribe or purchase under this Clause up or down to such extent as it may deem expedient and equitable so as to ensure that no Manager is required to subscribe or pay for a fraction of any Security, and in doing so may disregard any limitation contained in paragraph (2).

(4) as an alternative and/or in addition to paragraphs (1) and/or (2), the Lead Manager may, in its absolute discretion, subscribe or purchase any Securities to which this Clause applies and/or offer them to any person (whether or not a Manager) or retain them for its/their own account.

Any Securities to which this Clause relates will be subscribed or purchased at the Issue Price (unless the only subscriber or purchaser is the Lead Manager and it determines otherwise).

A Manager who subscribes or purchases Securities of a defaulting Manager is entitled to receive its pro rata share of the Combined Commission payable to such Manager (subject to adjustment in accordance with Clause 6(b)).

4. AUTHORITY TO LEAD MANAGER

Each of the Managers authorises the Lead Manager, as its agent and on its behalf, to do whatever that Manager is (or all the Managers together are)

required or entitled to do under the Subscription Agreement including, but not limited to the following:

(1) entering into such arrangements with Euroclear Bank S.A./ N.V. and Clearstream Banking société anonyme or such other clearing system as may be specified for closing of the issue in the Invitation to Managers (or the entities through whom they act) as the Lead Manager reasonably believes to be appropriate to effect payment for and delivery of the Securities or the Global Instrument delivered in respect of the Securities

(2) borrowing for the account of the Managers, for their several accounts in proportion to their respective Commitments plus their respective Additional Percentage, such sum as may be necessary in order that payments due to the Issuer and the Managers can be effected as specified in the Subscription Agreement and the Lead Manager may pay interest at then current rates

As an alternative to borrowing, the Lead Manager may as principal lend, and may charge interest at then current rates on, such sums as are referred to in the first paragraph of this sub Clause (2) mutatis mutandis on the terms of such first paragraph

(3) waiving compliance with any of the conditions referred to in the Subscription Agreement in respect of which the right of waiver is not restricted

(4) without prejudice to the other provisions of this Agreement, each of the Managers authorises the Lead Manager to take all action it deems necessary or desirable in connection with this Agreement and the Subscription Agreement, if in its judgement such action will not have a material adverse effect upon the interests of the Managers.

5. STABILISATION AND GREENSHOE OPTION

(a) Authority to Stabilising Manager:

In order to facilitate the distribution of the Securities, the Managers severally authorise the Stabilising Manager and any stabilising agents it may appoint, in the Stabilising Manager's absolute discretion and for

the account of the Managers, with a view to stabilising or maintaining the market price of the Stabilisation Securities at levels other than those which might otherwise prevail in the open market, to the extent permitted by applicable laws to undertake any of the following:

(1) to purchase and sell any amount of the Stabilisation Securities in the open market or otherwise on such terms as it may decide,

(2) to offer any amount of the Stabilisation Securities in excess of the aggregate principal amount of the Stabilisation Securities,

(3) to take such action to hedge the stabilisation account in whatever securities the Stabilising Manager may deem appropriate, and

(4) to cover any short position or sell any long position incurred pursuant to (1), (2) or (3) above upon such terms as it may think fit;

Any positions so incurred or transactions so entered into for the account of the Managers shall be closed out within 30 days after the Closing Date. Any resulting profit or loss shall be for the account of the Managers (pro rata to their respective Commitments), subject to Clause 6(b), and otherwise for the account of the Lead Manager.

(b) Power to Borrow:

The Stabilising Manager may advance its own funds, or borrow for the account of the Managers, for the purposes of stabilisation and over-allotment pursuant to paragraph (a) above, and may (subject to the limitation contained in the final paragraph of Clause 6(b)) charge or, as the case may be, pay interest at then current rates, such interest to be taken into account as an expense of such action before calculating the profit and loss on such stabilisation or over-allotment.

(c) Non-Stabilisation Agreement :

No Manager other than the Stabilising Manager (and any lawful agent appointed by it) will effect any transactions (whether in the open market or otherwise) with a view to stabilising or maintaining the market price of the Stabilisation Securities at levels other than those that might otherwise prevail.

(d) Greenshoe Option Exercise:

Each Manager acknowledges that the Lead Manager may exercise any Greenshoe Option on its behalf pro rata to such Manager's Commitment.

6. COMMISSIONS

(a) Distribution of Commissions:

The Lead Manager shall, out of the balance of the moneys received by it pursuant to the issue of the Securities, (1) deduct the Praecipium (if any) and (2) distribute the balance of the Combined Commission to all the non-defaulting Managers. If the Managers have already received all or part of their Combined Commission, the Lead Manager may invoice the Managers, in proportion to their respective Commitments, for their share of any expenses, losses, interest, or costs referred to in Clause 6(b), subject to the limit in Clause 6(b).

The Lead Manager shall at the same time distribute any Combined Commission which would otherwise have been due to a defaulting Manager, in accordance with the last paragraph of Clause 3.

(b) Adjustment to Commissions**:**

The Lead Manager may adjust the balance of the Combined Commission due to each Manager as nearly as practicable in proportion to the respective Commitments as follows (except to the extent that such adjustment would reduce a Manager's Combined Commission below zero, or would result in a Manager receiving any amount in excess of its Combined Commission):

(1) The Lead Manager may deduct any expenses incurred by the Lead Manager in connection with the issue of the Securities to the extent not reimbursed by the Issuer, or any Guarantor.

(2) The Lead Manager may deduct any overall loss incurred as a result of transactions effected in accordance with Clause 5(a).

(3) The Lead Manager shall, if deducting losses in accordance with paragraph (2) of this Clause 6(b) add any overall profit earned as a result of transactions effected in accordance with Clause 5(a).

(4) The Lead Manager may take account of interest on any borrowings made on behalf of such Manager under Clause 4(2) or of any loan made by it under Clause 4(2).

(5) The Lead Manager may take account of any costs associated with the failure of any Manager to subscribe for its Securities.

7. EXPENSES

(a) Retention:

The amount paid by the Issuer or the Guarantor in respect of Managers' expenses shall be retained by the Lead Manager for its own account. The other Managers will not be reimbursed for any of their expenses in connection with the issue of the Securities.

(b) Expenses on Termination:

If the obligations of the Managers under the Subscription Agreement to subscribe or purchase the Securities are terminated, the Managers agree to contribute in proportion to their respective Commitments in meeting any direct out-of-pocket expenses incurred by the Lead Manager that are not recoverable and/or are not recovered from the Issuer or the Guarantor under the Subscription Agreement, provided that no Manager other than the Lead Manager shall be required to contribute more than the amount it would otherwise have received by way of Combined Commission.

8. MANAGERS' REPRESENTATIONS AND WARRANTIES AND INDEMNITY

(1) Each Manager represents and warrants to each other Manager that:

(a) it has not sold and will not sell any of the Securities at any price other than the Reoffer Price until notified by the Lead Manager that it may do so; and

(b) it has complied and will comply with its obligations under the Subscription Agreement and this Agreement, including any selling restrictions, laws or regulations relevant to

the offering and sale of the Securities, and with any other restrictions notified to it by the Lead Manager.

(2) Each Manager agrees to indemnify and hold harmless (a) each other Manager (solely in its capacity as Manager under the Subscription Agreement) and (b) its directors, officers, employees, agents and affiliates and each person, if any, who controls such Manager within the meaning of either Section 15 of the US Securities Act of 1933, as amended or Section 20 of the US Securities Exchange Act of 1934, as amended ("Third Parties" and, together with the persons referred to in paragraph (a) of this sub Clause (2), each an "Indemnified Party"), from and against any and all losses, claims, damages and liabilities arising from any breach by such Manager of any of the provisions of this Agreement or the Subscription Agreement, including, without limitation, legal fees, costs and expenses.

The Contracts (Rights of Third Parties) Act 1999 applies to this sub Clause (2).

9. TERMINATION

If any of the obligations to subscribe or purchase the Securities under the Subscription Agreement are to be terminated, the Lead Manager shall, to the extent it considers reasonably practicable, consult with the other Managers. The Lead Manager may in any event, on behalf of the Managers and in its sole discretion, give notice of such termination to the Issuer and/or the Guarantor in accordance with the terms of the Subscription Agreement and shall not be responsible to any Manager for any consequences resulting from any such notice. No other Manager may give any such notice, and the Lead Manager may not be required to give, or not to give, such notice.

10. PARTNERSHIP

None of the provisions of this Agreement or any other agreement relating to the Securities shall constitute or be deemed to constitute a partnership or joint venture between the Managers or any of them, or between them (or any of them) and anyone else, and, except as specifically provided, none of the Managers shall have any authority to bind any other Manager in any way.

11. CONTRIBUTION BETWEEN MANAGERS

(1) No Manager shall be liable to make a contribution in respect of any claim or proceeding under this Clause 11 to any other Manager or Third Party:

(a) to the extent that the claim or proceeding is made by a regulatory or supervisory body by which such other Manager or Third Party is authorised or regulated, in respect of a breach of the rules or regulations of that body by such Manager or Third Party;

(b) to the extent that the claim or proceeding relates to a breach by such other Manager of the Subscription Agreement or by such other Manager or Third Party of any other agreement relating to the issue of the Securities; or

(c) where such Manager or Third Party is also the Issuer or Guarantor or any entity in the Issuer's or Guarantor's group.

(2) Subject to the other paragraphs of this Clause 11, each Manager agrees, whether or not the Securities shall have been issued and settlement made of all other rights and obligations under this Agreement, to contribute pro rata to its Commitment (without regard to the limits set out in Clause 6(b)) towards the following:

(a) all expenses incurred by any Manager or Third Party and not reimbursed by the Issuer or the Guarantor or any other person in investigating or defending any claim or proceeding asserted or commenced by any party (including any governmental or regulatory body) in connection with the issue and offering of the Securities; and

(b) any liability, including legal fees, incurred by any Manager or Third Party in respect of any such claim or proceeding, and not reimbursed by the Issuer or the Guarantor whether such liability shall be the result of a judgment or of any settlement agreed by such Manager or Third Party.

(3) The Managers confirm their authority to the Lead Manager to take such action on behalf of the Managers under this Clause 11 as, in its absolute discretion, the Lead Manager considers appropriate.

(4) The Lead Manager shall notify the other Managers of any such claim or proceeding as is referred to in this Clause 11 that is made against it or that is notified to it under paragraph (5).

(5) Where any claim or proceeding is asserted or commenced against any Manager by any party (including any governmental or regulatory body) in connection with the issue and offering of the Securities, that Manager shall promptly notify the Lead Manager thereof. At any time after such a notification, the Lead Manager shall be entitled to assume the defence and/or conduct of such claim or proceeding.

(6) No Manager or Third Party shall be entitled to any contribution under this Clause 11 if it has, without the agreement of the Lead Manager, taken any action or engaged in any course of conduct in connection with any such claim or proceeding that may have a substantial adverse effect on the outcome of any such claim or proceeding.

(7) Where any such claim or proceeding is brought against any Manager, the Lead Manager shall retain legal advisers to represent the person against whom the claim or proceeding is brought and each Manager shall pay a share, on a basis pro rata to its Commitment (without regard to the limits set out in Clause 6(b)), of the fees and expenses of such legal advisers related to such claim or proceeding. In any such claim or proceeding, any Manager shall have the right to retain its own legal advisers, but the fees and expenses of such legal advisers shall be the liability of such Manager, unless any of the following circumstances occur in which case they shall be the liability of all of the Managers, on a basis pro rata to their Commitments (without regard to the limits set out in Clause 6(b)):

(a) the Lead Manager has failed within a reasonable time to agree on the legal advisers to be retained; or

(b) representation of all the Managers by the same legal advisers would be inappropriate due to actual or potential differing interests between them.

(8) No Manager against whom any claim or proceeding has been brought shall be liable for any settlement of any such claim or

proceeding effected without its written consent unless that claim or proceeding was brought against Managers whose Commitments amount to 50 per cent of the total Commitments and the majority of such Managers, measured by their Commitments, decide to settle such claim or proceeding. If a claim or proceeding is settled pursuant to the preceding sentence or if there be a final judgment for the plaintiff, the Managers agree, subject to paragraph (1), to share on a basis pro rata to their Commitments any loss or liability by reason of such settlement or judgment. Except as provided in the first sentence of this paragraph, no Manager shall, without the prior written consent of the majority by Commitment amount of the other Managers, effect any settlement of any pending or threatened claim or proceeding in respect of which any other Manager is or could have been a party and payment could have been sought hereunder from that other Manager, unless such settlement includes an unconditional release of such other Manager from all liability in respect of the subject matter of such claim or proceeding.

(9) This Clause 11 shall override any other provision in any other contract relating to the issue of the Securities to which the Managers are parties, to the extent that it is inconsistent with any such other provision.

(10) The Contracts (Rights of Third Parties) Act 1999 applies to this Clause 11. However the rights of Third Parties under this Clause 11 are conditional on their having complied with the provisions of paragraphs (5) and (6) of this Clause 11 and the final sentence of paragraph (8) as if they had been Managers under this Agreement.

12. JOINT LEAD MANAGERS

Where there is more than one Lead Manager or Joint Bookrunners, any reference in this Agreement to the "Lead Manager" shall be construed as follows:

(a) where any activity is expressed in the Invitation to Managers or the Subscription Agreement to be exercisable by one or more of the Lead Managers or Joint Bookrunners, as a reference, in relation to that activity, to that/those Lead Manager(s) or Joint Bookrunner(s); and

(b) in all other cases, as a reference to each of the Lead Managers or Joint Bookrunners and so that any right, discretion or authority shall be carried out by them jointly.

Where there is any conflict between the Subscription Agreement, the Invitation to Managers and this Agreement in relation to the roles of joint Lead Managers or Joint Bookrunners, the Subscription Agreement will prevail.

13. MONEY LAUNDERING

The Lead Manager that makes arrangements for the issue and payment of the Securities with the clearing system or systems hereby confirms the following:

(a) it has taken or will take all appropriate action required, under the law and regulations applicable to it implementing Council Directive No 91/308/EEC concerning prevention of money laundering, in relation to the identification of the Issuer and those acting on its behalf, for the purposes of the issue of the Securities or if no such laws or regulations apply, appropriate action equivalent to the requirements under Council Directive No 91/308/EEC; and

(b) it will provide any Manager on request with certified copies of the relevant underlying evidence of identification of the Issuer and those acting on its behalf for the purposes of the issue of the Securities, as aforesaid.

In taking such action as it deems appropriate, the Lead Manager accepts no liability for any direct or indirect loss to the Managers in relation to any action taken by it under this Clause.

14. SURVIVAL OF RIGHTS

Completion of the subscription or purchase of the Securities by the Managers shall not terminate any rights any party may have under this Agreement, which shall continue in full force and effect.

15. THIRD PARTY RIGHTS

A person who is not a party to this Agreement has no right under the Contracts (Rights of Third Parties) Act 1999 to enforce any term of this Agreement, except to the extent that this Agreement expressly provides for such Act to apply to any of its terms. The parties to this Agreement may amend or waive any of its terms without the consent of any Third Party.

16. GOVERNING LAW AND JURISDICTION

This Agreement, as to which time shall be of the essence, shall be governed by and construed in accordance with English law. With respect to any suit, action or proceedings relating to this Agreement ("**Proceedings**"), each party irrevocably submits to the jurisdiction of the English courts and waives any objection it may have at any time to the laying of venue of any Proceedings brought in any such court, waives any claim that such Proceedings have been brought in an inconvenient forum and further waives the right to object, with respect to such Proceedings, that such court does not have jurisdiction over such party.

Nothing in this Agreement precludes any party from bringing Proceedings in any other jurisdiction nor will the bringing of Proceedings in any one or more jurisdictions preclude the bringing of Proceedings in any other jurisdiction (whether concurrently or not).

SCHEDULE

Additional Percentage	The percentage referred to in the Subscription Agreement as the limit on the additional amount of Securities that a Manager can be called upon to subscribe or purchase under Clause 3(2), or, if no such percentage is specified in the Subscription Agreement, 10 per cent.
Closing Date	The date defined as such in the Subscription Agreement.
Combined Commission	The combined management, underwriting and selling commission set out in the Invitation to Managers, or, as amended with the agreement of the Managers, as set out in the Subscription Agreement, which shall prevail, excluding any Praecipium, and which may be expressed as a total fee.
Commitment	The amount of Securities which a Manager has agreed to underwrite as described in Clause 2 of this Agreement, excluding the Additional Percentage.
Guarantor	The Guarantor, if any, of the issue.
Global Instrument	Any global instruments to be delivered by the Issuer, as provided for in the Subscription Agreement.
Greenshoe Option	An option given by the Issuer to the Lead Manager to increase the amount of the Securities to be issued in connection with over-allotment.
Invitation to Managers	The telex, fax, electronic message or other document inviting each Manager to participate in the issue.
Issue Price	The price notified to the Managers at which the Securities will be issued.
Issuer	The issuer of the Securities.
Joint Bookrunners	The Managers (if any) identified as such in the Invitation to Managers or the Subscription Agreement.
Lead Manager	The Manager expressed to be the Lead Manager in the Invitation to Managers or as notified by any

	subsequent telex, fax, electronic message or other document, and as further described in Clause 12 of this Agreement.
Managers	The parties named as such in the Subscription Agreement.
Praecipium	The praecipium, if any, set out in the Invitation to Managers.
Reoffer Price	The price defined as such in the Invitation to Managers or, if none, the price below which the Managers were told they should not reoffer the Securities until notified otherwise.
Securities	The securities to be issued as described in the Invitation to Managers, including, at the option of the Managers, any Greenshoe Option.
Signing Authority	The document from a Manager that purports to appoint an authorised attorney or signatory to execute the Subscription Agreement.
Stabilisation Securities	The securities in respect of which the right to carry out stabilising action has been reserved in any offering circular, offering memorandum, prospectus or announcement either pursuant to the Conduct of Business Rules of the Financial Services Authority, or otherwise in accordance with any applicable law or regulation.
Stabilising Manager	The person or persons identified as having the right to stabilise in any offering circular, offering memorandum, prospectus or announcement either pursuant to the Conduct of Business Rules of the Financial Services Authority, or otherwise in accordance with any applicable law or regulation.
Subscription Agreement	The agreement (sometimes called an "underwriting agreement", "terms agreement" or "purchase agreement") between the Issuer, the Guarantor (if appropriate), the Lead Manager and the other Managers setting out the terms and conditions upon which the Managers agree to subscribe the Securities.

AGREEMENT AMONG MANAGERS

FRENCH AND GERMAN LAW SCHEDULES

AGREEMENT AMONG MANAGERS

French Law Schedule
Version for Issues Governed by French Law
(Equity-Related Issues)

The following Clauses amend the Clauses of the same numbers in Version 2 of the Agreement Among Managers so that the Agreement can be applied to issues governed by French law. Apart from these amendments, the French Law Version 2 of the Agreement Among Managers is identical to the English Law version reproduced in full in this ICMA Primary Market Handbook. Where a French Law Version of the Agreement Among Managers is used, the Agreement Among Managers can be designated *French Version 2*, as appropriate. This Version applies to issues for which the Invitation to Managers is sent on or after 16 May 2005.

Clause 3 line 2

Delete the words *in its absolute discretion*.

Clause 4(1)

This Clause should read as follows:

(1) entering into such arrangements with Euroclear France, or, if applicable, Euroclear Bank S.A./N.V. and Clearstream Banking sociéte anonyme, or such other clearing system as may be specified for closing of the issue in the Invitation to Managers (or the entities through whom they act) as the Settlement Lead Manager reasonably believes to be appropriate to effect payment for, and credit or delivery, as appropriate, of the Securities or the Global Instrument delivered in respect of the Securities.

Clause 5(A) lines 2 and 3

Delete the words *in the Stabilising Manager's absolute discretion and*.

Clause 8

Delete the last sentence.

Clause 9

Delete the words *and in its sole discretion*.

Clause 10

This Clause should read as follows:

> ***10. PARTNERSHIP***
>
> *None of the provisions of this Agreement or any other agreement relating to the Securities shall constitute or be deemed to constitute a partnership, joint venture or other foreign legal institution between the Managers or any of them, or between them (or any of them) and anyone else, and, except as specifically provided, none of the Managers shall have any authority to bind any other Manager in any way.*

Clause 11(3)

Delete the words *in its absolute discretion.*

Clause 11(10)

This Clause should read as follows:

> *The rights of Third Parties under this Clause 11 are conditional on their having complied with the provisions of paragraphs (5) and (6) of this Clause 11 and the final sentence of paragraph (8) as if they had been Managers under this Agreement.*

Clause 15

Delete this Clause.

Clause 16

This Clause should read as follows:

16. GOVERNING LAW AND JURISDICTION

This Agreement shall be governed by and construed in accordance with French law. The parties agree that the Paris Tribunal de Commerce shall have jurisdiction to settle any disputes which may arise out of or in connection with this Agreement. To the extent permitted by applicable laws and treaties, each party reserves the right to waive the benefit of this provision and to take proceedings in any other court of competent jurisdiction.

Schedule

Delete the Definition of Global Instrument and insert the amended definition:

Global Instrument	*Any instrument or certificate to be delivered by the Issuer in respect of the Securities*

AGREEMENT AMONG MANAGERS

German Law Schedule
Version for Issues Governed by German Law
(Equity-Related Issues)

The following Clause amends the Clause of the same number in Version 2 of the Agreement Among Managers so that the Agreement can be applied to issues governed by German law. Apart from this amendment, the German Law Version 2 of the Agreement Among Managers is identical to the English Law version reproduced in full in this ICMA Primary Market Handbook. When a German Law Version of the Agreement Among Managers Version 2 is used, the Agreement Among Managers can be designated *German Version 2*. This Version applies to issues for which the Invitation to Managers is sent on or after 16 May 2005.

Clause 8

Delete the last sentence of Clause 8.

Clause 11

Delete the first sentence of paragraph 10 of Clause 11. Start the second sentence with *The*, and delete the word *However*.

Clause 15

Delete the first sentence of Clause 15.

Clause 16

Delete the first paragraph of Clause 16 and insert the words:

> *This Agreement shall be governed by and construed in accordance with the law of the Federal Republic of Germany. The courts of Frankfurt am Main, Federal Republic of Germany, shall have non-exclusive jurisdiction over any dispute arising under or in connection with this Agreement and each party irrevocably submits to the jurisdiction of such German courts.*

AGREEMENT AMONG MANAGERS

Version 3
(Managers only – Equity-Related Issues)

Withdrawn April 2005

April 2005

SECTION SEVEN
ICMA STANDARD DOCUMENTATION AND STANDARD LANGUAGE

II

(a) **ICMA Pro Forma "Final Terms" and Pricing Supplement for Medium Term Note Programmes: Explanatory Memorandum**

(b) **Pro forma final terms for medium term note programmes for use in connection with issues of securities with a denomination of less than €50,000 to be admitted to trading on an EEA regulated market and/or offered to the public in the EEA**

(c) **Pro forma final terms for medium term note programmes for use in connection with issues of securities with a denomination of at least €50,000 to be admitted to trading on an EEA regulated market**

(d) **Pro forma final terms for medium term note programmes for use in connection with issues of securities admitted to trading on the UK Professional Securities Market**

(e) **Pro forma pricing supplement for medium term note programmes for use in connection with issues of securities which are not subject to the Prospectus Directive**

ICMA PRO FORMA 'FINAL TERMS' AND PRICING SUPPLEMENT FOR MEDIUM TERM NOTE PROGRAMMES

EXPLANATORY MEMORANDUM

ICMA is publishing the following revised suggested pro formas:

- "Final terms" for medium term note programmes for use in connection with issues of securities with a denomination of less than €50,000 to be admitted to trading on an EEA regulated market and/or offered to the public in the EEA, based on the requirements of Annex V of the Prospectus Regulation (originally published in May 2005);

- "Final terms" for medium term note programmes for use in connection with issues of securities with a denomination of at least €50,000 to be admitted to trading on an EEA regulated market, based on Annex XIII of the Prospectus Regulation (originally published in May 2005);

- "Final terms" for medium term note programmes for use in connection with issues of securities admitted to trading on the UK Professional Securities Market (originally published in January 2006); and

- Pricing supplement for medium term note programmes for use in connection with issues of securities which are not subject to the Prospectus Directive (last published in June 2003).

The pro formas have been prepared with the help of the ICMA members and a group of City of London capital markets law firms and have been circulated to a number of other law firms prior to publication. The ICMA is extremely grateful for the advice and assistance it has received.

The pro formas are appropriate for most medium term note programmes for which the base prospectus is approved in the United Kingdom. ICMA also understands that they are appropriate for most medium term note programmes for which the base prospectus is approved in many other EEA Member States, in particular since the Prospectus Directive was intended to be a maximum harmonisation directive creating a uniform approach to base prospectuses and final terms throughout the EEA. However, it should

be noted that there remain potential local law issues in individual EEA Member States, including in relation to the particular implementation of the Prospectus Directive in those Member States, or local market practices which may mean that modifications to the pro formas may be appropriate.

The purpose of the pro formas is to assist market efficiency by providing a generally accepted standard format and, in case of the final terms, to assist the market with the implementation of the requirements of the Prospectus Directive and Regulation. They are an assessment of the legal requirements and practices but will be subject to change as actual practice develops.

The pro formas have not been approved by any competent authority. They are neither a 'maximum' nor a 'minimum' in terms of content. They are not legal advice and it is for issuers and their advisers to decide how to comply with the requirements in the context of the provisions of their programmes and the characteristics of particular drawdowns under them, as well as applicable national laws and regulations.

The pro formas are intended to be as helpful as possible at the time of their publication. They may not, however, contain all language appropriate in every situation. In particular, it is important to check that they do not conflict with any other form of final terms/pricing supplement specified in the programme documentation and that all amendments and/or additions necessary in the particular situation are made.

If the revised pro formas are included by way of an amendment to an existing programme, careful consideration should be given to any conforming changes in the terms and conditions that may be necessary.

If an issue originally documented under a different form or version of one of the pro formas is increased, careful consideration should be given to the appropriate form of documentation for the increase.

The numbering of the pro formas is designed to retain a reference to all material items while producing a final document which is as short as possible. Where a heading requires a number of additional items to be included, these should be in the form of sub-paragraphs designated (i), (ii) and so on, without the numbering being affected.

The Prospectus Directive provides that if the final terms of an offer are not included in the base prospectus for a debt programme, or a supplement to it, they should be provided to investors and filed with the competent authority when each public offer is made as soon as practicable and if possible in advance of the beginning of the offer (Article 5(4)). The Prospectus Regulation provides that the final terms shall only contain the information items from the various securities note schedules according to which the base prospectus is drawn up (Article 22(4)). It also requires base prospectuses to indicate which information will be included in the final terms (Article 22(5)(1)). The base prospectus will typically contain the relevant form or forms of the final terms. For programmes which envisage issues of debt securities having a denomination below €50,000 as well as €50,000 or above, it may be appropriate to include both forms in the base prospectus.

Issuers and their advisers should be aware that if securities are offered to the public in the EEA or admitted to trading on an EEA regulated market, it is the issuer's responsibility to ensure that final terms are (i) filed with the regulatory authority that approved the base prospectus in accordance with Article 5(4) of the Prospectus Directive and (ii) published in accordance with Article 14 of the Prospectus Directive and Article 33 of the Prospectus Directive Regulation.

When forwarding final terms to a relevant regulatory authority, issuers, their agents or advisers should take care to ensure that the authority is aware of the purpose of the filing and in particular whether it is intended that the securities are to be admitted to trading on a regulated market and, if so, from what date. Final terms should not be submitted to a regulatory authority without specific instructions to do so and a clear understanding of the purpose of that submission. Application for admission to trading and/or submission in respect of a non-exempt offer of notes should not be made in circumstances where a supplement to the base prospectus is required until such time as the supplement has been approved and published in accordance with the Prospectus Directive.

ICMA PRO FORMA FINAL TERMS FOR USE IN CONNECTION WITH ISSUES OF SECURITIES WITH A DENOMINATION OF LESS THAN €50,000 TO BE ADMITTED TO TRADING ON AN EEA REGULATED MARKET AND/OR OFFERED TO THE PUBLIC ON A NON-EXEMPT BASIS IN THE EEA

The attached pro forma is intended to be used in circumstances where the Euro Medium Term Note Programme is subject to the Prospectus Directive, i.e. where the relevant Prospectus has been approved by the competent authority for the purpose of issuing Notes which are to be to be admitted to trading on an EEA regulated market and/or offered to the public (within the meaning of the Prospectus Directive) in the EEA in circumstances where a prospectus is required under the Prospectus Directive (i.e. a "non-exempt offer") and where the Notes issued in the drawdown have a denomination of less than €50,000. The disclosure is based on Annex V of the Prospectus Regulation.

It replaces the pro forma Final Terms published in May 2005.

The Prospectus Directive provides that if the final terms of an offer are not included in the base prospectus for a debt programme, or a supplement to it, they should be provided to investors and filed with the competent authority when each non-exempt public offer is made as soon as practicable and if possible in advance of the beginning of the offer (Article 5(4)). The Prospectus Regulation provides that the final terms shall only contain the information items from the various securities note schedules according to which the base prospectus is drawn up (Article 22(4)). It also requires base prospectuses to indicate which information will be included in the final terms (Article 22(5)(1)). The base prospectus will typically contain the relevant form or forms of the final terms.

Issuers and their advisers should be aware that if securities are offered to the public on a non-exempt basis in the EEA or admitted to trading on an EEA regulated market, it is the Issuer's responsibility to ensure that final terms are (i) filed with the regulatory authority that approved the base prospectus in accordance with Article 5(4) of the Prospectus Directive and (ii) published in accordance with Article 14 of the Prospectus Directive and Article 33 of the Prospectus Directive Regulation (see note 4 below).

When forwarding final terms to a relevant regulatory authority, issuers, their agents or advisers should take care to ensure that the authority is aware of the purpose of the filing and in particular whether it is intended that the securities are to be admitted to trading on a regulated market and, if so, from what date. Final terms should not be submitted to a regulatory authority without specific instructions to do so and a clear understanding of the purpose of that submission. Application for admission to trading and/or submission in respect of a non-exempt offer of notes should not be made in circumstances where a supplement to the base prospectus is required until such time as the supplement has been approved and published in accordance with the Prospectus Directive.

Final Terms dated •

[Name of Issuer]
Issue of [Aggregate Nominal Amount of Tranche] [Title of Notes]
[Guaranteed by [**Name of Guarantor**]]
under the ***[insert Programme Amount]*** [**Debt Issuance Programme**]
[Euro Medium Term Note Programme]

[The Prospectus referred to below (as completed by these Final Terms) has been prepared on the basis that, except as provided in sub-paragraph (ii) below, any offer of Notes in any Member State of the European Economic Area which has implemented the Prospectus Directive (2003/71/EC) (each, a **Relevant Member State**) will be made pursuant to an exemption under the Prospectus Directive, as implemented in that Relevant Member State, from the requirement to publish a prospectus for offers of the Notes. Accordingly any person making or intending to make an offer of the Notes may only do so in:

(i) in circumstances in which no obligation arises for the Issuer or any Dealer to publish a prospectus pursuant to Article 3 of the Prospectus Directive or supplement a prospectus pursuant to Article 16 of the Prospectus Directive, in each case, in relation to such offer; or

(ii) in those Public Offer Jurisdictions mentioned in Paragraph 37 of Part A below, provided such person is one of the persons mentioned in Paragraph 37 of Part A below and that such offer is made during the Offer Period specified for such purpose therein.

Neither the Issuer nor any Dealer has authorised, nor do they authorise, the making of any offer of Notes in any other circumstances] [1].

[The Prospectus referred to below (as completed by these Final Terms) has been prepared on the basis that any offer of Notes in any Member State of the European Economic Area which has implemented the Prospectus Directive (2003/71/EC) (each, a **Relevant Member State**) will be made pursuant to an exemption under the Prospectus Directive, as implemented in that Relevant Member State, from the requirement to publish a prospectus for offers of the Notes. Accordingly any person making or intending to make an offer in that Relevant Member State of the Notes may only do so in circumstances in which no obligation arises

for the Issuer or any Dealer to publish a prospectus pursuant to Article 3 of the Prospectus Directive or supplement a prospectus pursuant to Article 16 of the Prospectus Directive, in each case, in relation to such offer. Neither the Issuer nor any Dealer has authorised, nor do they authorise, the making of any offer of Notes in any other circumstances] [2].

PART A – CONTRACTUAL TERMS

Terms used herein shall be deemed to be defined as such for the purposes of the Conditions set forth in the Prospectus[3] dated •[4] [and the supplemental Prospectus dated •][5] which [together] constitute[s] a base prospectus for the purposes of the Prospectus Directive (Directive 2003/71/EC) (the **Prospectus Directive**). This document constitutes the Final Terms of the Notes described herein for the purposes of Article 5.4 of the Prospectus Directive and must be read in conjunction with such Prospectus [as so supplemented]. Full information on the Issuer [, the Guarantor(s)] and the offer of the Notes is only available on the basis of the combination of these Final Terms and the Prospectus [as so supplemented]. The Prospectus [and the supplemental Prospectus] [is] [are] available for viewing [at [website]] [and] during normal business hours at [address] [and copies may be obtained from [address]].[6]

The following alternative language applies if the first tranche of an issue which is being increased was issued under a Prospectus with an earlier date.

Terms used herein shall be deemed to be defined as such for the purposes of the Conditions (the **Conditions**) set forth in the Prospectus[1] dated [original date] [and the supplemental Prospectus dated •][5]. This document constitutes the Final Terms of the Notes described herein for the purposes of Article 5.4 of the Prospectus Directive (Directive 2003/71/EC) (the **Prospectus Directive**) and must be read in conjunction with the Prospectus dated [current date] [and the supplemental Prospectus dated •][5], which [together] constitute[s] a base prospectus for the purposes of the Prospectus Directive, save in respect of the Conditions which are extracted from the Prospectus dated [original date] [and the supplemental Prospectus dated •] and are attached hereto. Full information on the Issuer [, the Guarantor(s)] and the offer of the Notes is only available on the basis of the combination of these Final Terms and the Prospectuses dated

[original date] and [current date] [and the supplemental Prospectuses dated • and •]. The Prospectuses [and the supplemental Prospectus] are available for viewing [at [website]] [and] during normal business hours at [address] [and copies may be obtained from [address]].[6]

[Include whichever of the following apply or specify as "Not Applicable" (N/A). Note that the numbering should remain as set out below, even if "Not Applicable" is indicated for individual paragraphs or sub-paragraphs. Italics denote guidance for completing the Final Terms.]

[When completing any final terms, or adding any other final terms or information, consideration should be given as to whether such terms or information constitute "significant new factors" and consequently trigger the need for a supplement to the Prospectus under Article 16 of the Prospectus Directive].

1.	[(i)]	Issuer:	[ ]
	[[(ii)	Guarantor:	[ ]]
2.	[(i)]	Series Number:	[ ]
	[(ii)	Tranche Number: (If fungible with an existing Series, details of that Series, including the date on which the Notes become fungible).]	[ ]
3.		Specified Currency or Currencies:	[ ]
4.		Aggregate Nominal Amount:	[ ]
	[(i)]	Series:	[ ]
	[(ii)	Tranche:	[ ]]
5.		Issue Price:	[ ] per cent of the Aggregate Nominal Amount [plus accrued interest from [*insert date*] (*if applicable*)]
6.	(i)	Specified Denominations:	[ ][7]
	(ii)	Calculation Amount:	[ ][8]

7.	(i)	Issue Date:	[ ]
	(ii)	Interest Commencement Date:	[*Specify*/Issue Date/Not Applicable][9]
8.		Maturity Date:	[*specify date or (for Floating Rate Notes) Interest Payment Date falling in or nearest to the relevant month and year*]
9.		Interest Basis:	[• per cent Fixed Rate] [[*specify reference rate*] +/– • per cent Floating Rate] [Zero Coupon] [Index Linked Interest] [Other (*specify*)] (further particulars specified below)
10.		Redemption/Payment Basis[10]:	[Redemption at par] [Index Linked Redemption] [Dual Currency] [Partly Paid] [Instalment] [Other (*specify*)]
11.		Change of Interest or Redemption/Payment Basis:	[*Specify details of any provision for convertibility of Notes into another interest or redemption/ payment basis*]
12.		Put/Call Options:	[Investor Put] [Issuer Call] [(further particulars specified below)]
13.	[(i)]	Status of the Notes:	Senior/[Dated/Perpetual]/ Subordinated][11]
	[(ii)]	Status of the Guarantee:	[Senior/[Dated/Perpetual]/ Subordinated][11]

	[(iii)] [Date [Board] approval for issuance of Notes [and Guarantee] obtained:	[ ] [and [ ], respectively]] *(N.B. Only relevant where Board (or similar) authorisation is required for the particular tranche of Notes or related Guarantee)*]
14.	Method of distribution:	[Syndicated/Non-syndicated]

PROVISIONS RELATING TO INTEREST (IF ANY) PAYABLE

15.	**Fixed Rate Note Provisions**	[Applicable/Not Applicable] *(If not applicable, delete the remaining sub-paragraphs of this paragraph)*
(i)	Rate[(s)] of Interest:	[ ] per cent per annum [payable [annually/semi-annually/quarterly/monthly/ other (*specify*)] in arrear]
(ii)	Interest Payment Date(s):	[ ] in each year [adjusted in accordance with *[specify Business Day Convention and any applicable Business Centre(s) for the definition of "Business Day"]/not adjusted]*
(iii)	Fixed Coupon Amount[(s)]:	[ ] per Calculation Amount
(iv)	Broken Amount(s):	[ ] per Calculation Amount, payable on the Interest Payment Date falling [in/on] [ ]
(v)	Day Count Fraction:	[30/360 / Actual/Actual (ICMA/ISDA) / other]
(vi)	[Determination Dates:	[ ] in each year (*insert regular interest payment*

		dates, ignoring issue date or maturity date in the case of a long or short first or last coupon. N.B. only relevant where Day Count Fraction is Actual/Actual (ICMA))]
(vii)	Other terms relating to the method of calculating interest for Fixed Rate Notes:	[Not Applicable/*give details*]
16.	**Floating Rate Note Provisions**	[Applicable/Not Applicable] (*If not applicable, delete the remaining sub-paragraphs of this paragraph)*
(i)	Interest Period(s):	[ ]
(ii)	Specified Interest Payment Dates:	[ ]
(iii)	First Interest Payment Date:	[ ]
(iv)	Business Day Convention:	[Floating Rate Convention/ Following Business Day Convention/ Modified Following Business Day Convention/ Preceding Business Day Convention/ other (*give details*)]
(v)	Business Centre(s):	[ ]
(vi)	Manner in which the Rate(s) of Interest is/are to be determined:	[Screen Rate Determination/ISDA Determination/other (*give details)*]
(vii)	Party responsible for calculating the Rate(s) of Interest and/or Interest Amount(s) (if not the [Agent]):	[ ]

(viii) Screen Rate Determination:

– Reference Rate: [ ]

– Interest Determination Date(s): [ ]

– Relevant Screen Page: [ ]

(ix) ISDA Determination:

– Floating Rate Option: [ ]

– Designated Maturity: [ ]

– Reset Date: [ ]

(x) Margin(s): [+/-][ ] per cent per annum

(xi) Minimum Rate of Interest: [ ] per cent per annum

(xii) Maximum Rate of Interest: [ ] per cent per annum

(xiii) Day Count Fraction: [ ]

(xiv) Fall back provisions, rounding rounding provisions, denominator and any other terms relating to the method of calculating interest on Floating Rate Notes, if different from those set out in the Conditions: [ ]

17. Zero Coupon Note Provisions [Applicable/Not Applicable] (*If not applicable, delete the remaining sub-paragraphs of this paragraph*)

(i) [Amortisation/Accrual] Yield: [ ] per cent per annum

(ii) Reference Price: [ ]

(iii) Any other formula/basis of determining amount payable: [ ]

18.	**Index-Linked Interest Note/other variable-linked interest Note Provisions**[10, 12]		[Applicable/Not Applicable] (*If not applicable, delete the remaining sub-paragraphs of this paragraph*)
	(i)	Index/Formula/other variable:	[*give or annex details*]
	(ii)	Party responsible for calculating the Rate(s) of Interest and/or Interest Amount(s) (if not the [Agent]):	[ ]
	(iii)	Provisions for determining Coupon where calculated by reference to Index and/or Formula and/or other variable:	[ ]
	(iv)	Determination Date(s):	[ ]
	(v)	Provisions for determining Coupon where calculation by reference to Index and/or Formula and/or other variable is impossible or impracticable or otherwise disrupted:	[ ]
	(vi)	Interest or calculation period(s):	[ ]
	(vii)	Specified Interest Payment Dates:	[ ]
	(viii)	Business Day Convention:	[Floating Rate Convention/ Following Business Day Convention/Modified Following Business Day Convention/Preceding Business Day Convention/ other (*give details*)]
	(ix)	Business Centre(s):	[ ]
	(x)	Minimum Rate/ Amount of Interest:	[ ] per cent per annum

(xi) Maximum Rate/ Amount of Interest: [ ] per cent per annum

(xii) Day Count Fraction: [ ]

19. Dual Currency Note Provisions[10] [Applicable/Not Applicable] *(If not applicable, delete the remaining sub-paragraphs of this paragraph)*

(i) Rate of Exchange/method of calculating Rate of Exchange: *[give details*]

(ii) Party, if any, responsible for calculating the principal and/or interest due (if not the [Agent]): [ ]

(iii) Provisions applicable where calculation by reference to Rate of Exchange impossible or impracticable: [ ]

(iv) Person at whose option Specified Currency(ies) is/are payable: [ ]

PROVISIONS RELATING TO REDEMPTION

20. Call Option [Applicable/Not Applicable] *(If not applicable, delete the remaining sub-paragraphs of this paragraph)*

(i) Optional Redemption Date(s): [ ]

(ii) Optional Redemption Amount(s) of each Note and method, if any, of calculation of such amount(s): [ ] per Calculation Amount

(iii) If redeemable in part:

(a) Minimum Redemption Amount: [ ] per Calculation Amount

(b) Maximum Redemption Amount: [ ] per Calculation Amount

(iv) Notice period[13]: [ ]

21. Put Option [Applicable/Not Applicable] (*If not applicable, delete the remaining sub-paragraphs of this paragraph*)

(i) Optional Redemption Date(s): [ ]

(ii) Optional Redemption Amount(s) of each Note and method, if any, of calculation of such amount(s): [ ] per Calculation Amount

(iii) Notice period[13]: [ ]

22. Final Redemption Amount of each Note[10, 12] [ ] per Calculation Amount

In cases where the Final Redemption Amount is Index-Linked or other variable-linked:

(i) Index/Formula/variable: [*give or annex details*]

(ii) Party responsible for calculating the Final Redemption Amount (if not the [Agent]): [ ]

(iii) Provisions for determining Final Redemption Amount where calculated by reference to Index and/or Formula and/or other variable: [ ]

(iv) Determination Date(s): [ ]

(v) Provisions for determining Final Redemption Amount where calculation by reference to Index and/or Formula and/or other variable is impossible or impracticable or otherwise disrupted: [ ]

(vi) Payment Date: [ ]

(vii) Minimum Final Redemption Amount: [ ] per Calculation Amount

(viii) Maximum Final Redemption Amount: [ ] per Calculation Amount

23. Early Redemption Amount [ ]

Early Redemption Amount(s) per Calculation Amount payable on redemption for taxation reasons or on event of default or other early redemption and/or the method of calculating the same (if required or if different from that set out in the Conditions):

GENERAL PROVISIONS APPLICABLE TO THE NOTES

24. Form of Notes: **Bearer Notes:**

[Temporary Global Note exchangeable for a Permanent Global Note which is exchangeable for Definitive Notes in the limited circumstances specified in the Permanent Global Note]

[Temporary Global Note exchangeable for Definitive

		Notes on [ ] days' notice] [Permanent Global Note exchangeable for Definitive Notes in the limited circumstances specified in the Permanent Global Note]
25.	New Global Note[14]:	[Yes] [No]
26.	Financial Centre(s) or other special provisions relating to payment dates:	[Not Applicable/*give details. Note that this paragraph relates to the date and place of payment, and not interest period end dates, to which sub-paragraphs 15(ii), 16(v) and 18(ix) relate*]
27.	Talons for future Coupons or Receipts to be attached to Definitive Notes (and dates on which such Talons mature):	[Yes/No. *If yes, give details*]
28.	Details relating to Partly Paid Notes: amount of each payment comprising the Issue Price and date on which each payment is to be made [and consequences (if any) of failure to pay, including any right of the Issuer to forfeit the Notes and interest due on late payment]:	[Not Applicable/*give details*]
29.	Details relating to Instalment Notes: amount of each instalment, date on which each payment is to be made:	[Not Applicable/*give details*]

30.	Redenomination, renominalisation and reconventioning provisions:	[Not Applicable/The provisions [in Condition • apply]
31.	Consolidation provisions:	[Not Applicable/The provisions [in Condition •] apply]
32.	Other final terms[15]:	[Not Applicable/*give details*] *[(When adding any other final terms consideration should be given as to whether such terms constitute "significant new factors" and consequently trigger the need for a supplement to the Prospectus under Article 16 of the Prospectus Directive.)]*

DISTRIBUTION

33.	(i)	If syndicated, names and addresses of Managers and underwriting commitments:	[Not Applicable/*give names, addresses and underwriting commitments*] *(Include names and addresses of entities agreeing to underwrite the issue on a firm commitment basis and names and addresses of the entities agreeing to place the issue without a firm commitment or on a "best efforts" basis if such entities are not the same as the Managers.)*
	(ii)	Date of [Subscription] Agreement:	[ ]
	(iii)	Stabilising Manager(s) (if any):	[Not Applicable/*give name*]

34.	If non-syndicated, name and address of Dealer:	[Not Applicable/*give name and address*]
35.	Total commission and concession:	[ ] per cent of the Aggregate Nominal Amount
36.	US Selling Restrictions:	[Reg. S Compliance Category; TEFRA C/TEFRA D/ TEFRA not applicable]
37.	Non-exempt Offer:[16]	[Not Applicable] [An offer of the Notes may be made by the Managers [and [*specify, if applicable*]] other than pursuant to Article 3(2) of the Prospectus Directive in [*specify relevant Member State(s) – which must be jurisdictions where the Prospectus and any supplements have been passported*] (**Public Offer Jurisdictions**) during the period from [*specify date*] until [*specify date*] (**Offer Period**). See further Paragraph 10 of Part B below.
38.	Additional selling restrictions:	[Not Applicable/*give details*]

PURPOSE OF FINAL TERMS

These Final Terms comprise the final terms required for issue [and] [public offer in the Public Offer Jurisdictions] [and] [admission to trading on [*specify relevant regulated market*][17] of the Notes described herein] pursuant to the [*insert Programme Amount*] [Debt Issuance Programme] [Euro Medium Term Note Programme] of •.

RESPONSIBILITY

The Issuer [and the Guarantor(s)] accept[s] responsibility for the information contained in these Final Terms. [*(Relevant third party information)* has been extracted from *(specify source)*. [Each of the] [The] Issuer [and the Guarantor(s)] confirms that such information has been accurately reproduced and that, so far as it is aware, and is able to ascertain from information published by *(specify source)*, no facts have been omitted which would render the reproduced information inaccurate or misleading.][18]

Signed on behalf of [name of the Issuer]:

By: .....
Duly authorised

[Signed on behalf of the [name of the Guarantor]:

By: .....
Duly authorised]

PART B – OTHER INFORMATION

1. LISTING[17, 19]

[Application has been made by the Issuer (or on its behalf) for the Notes to be admitted to trading on [*specify relevant regulated market*] with effect from [ ].] [Application is expected to be made by the Issuer (or on its behalf) for the Notes to be admitted to trading on [*specify relevant regulated market]*] with effect from [ ].] [Not Applicable.]

(Where documenting a fungible issue need to indicate that original Notes are already admitted to trading.)

2. RATINGS

Ratings: The Notes to be issued have been rated:

[S & P: [ ]]

[Moody's: [ ]]

[Fitch: [ ]]

[[Other]: [ ]]

[Need to include a brief explanation of the meaning of the ratings if this has previously been published by the rating provider.]

(*The above disclosure should*

reflect the rating allocated to Notes of the type being issued under the Programme generally or, where the issue has been specifically rated, that rating.)

3. [INTERESTS OF NATURAL AND LEGAL PERSONS INVOLVED IN THE ISSUE/OFFER]

Need to include a description of any interest, including conflicting ones, that is material to the issue/offer, detailing the persons involved and the nature of the interest. May be satisfied by the inclusion of the following statement:

"Save as discussed in ["Subscription and Sale"], so far as the Issuer is aware, no person involved in the offer of the Notes has an interest material to the offer."]

[(When adding any other description, consideration should be given as to whether such matters described constitute "significant new factors" and consequently trigger the need for a supplement to the Prospectus under Article 16 of the Prospectus Directive.)]

4. REASONS FOR THE OFFER, ESTIMATED NET PROCEEDS AND TOTAL EXPENSES

[(i) Reasons for the offer	[ ] (S*ee [*"*Use of Proceeds*"*] wording in Prospectus – if reasons for offer different from making profit and/or hedging certain risks will need to include those reasons here.)*]
[(ii)] Estimated net proceeds:	[ ] *(If proceeds are intended for more than one use will need to split out and present in order of priority. If proceeds insufficient to*

fund all proposed uses state amount and sources of other funding.)

[(iii)] Estimated total expenses: [ ]

[*Include breakdown of expenses*]
*(If the Notes are derivative securities to which Annex XII of the Prospectus Directive Regulation applies it is only necessary to include disclosure of net proceeds and total expenses at (ii) and (iii) above where disclosure is included at (i) above.)**

5. [*Fixed Rate Notes only* – YIELD

Indication of yield: [ ]

Calculated as [*include details of method of calculation in summary form*] on the Issue Date.

As set out above, the yield is calculated at the Issue Date on the basis of the Issue Price. It is not an indication of future yield.]

6. [*Floating Rate Notes only* – HISTORIC INTEREST RATES

Details of historic [LIBOR/EURIBOR/other] rates can be obtained from [Reuters].]

7. [*Index-Linked or other variable-linked Notes only* – PERFORMANCE OF INDEX/FORMULA/other variable, EXPLANATION OF EFFECT ON VALUE OF INVESTMENT AND ASSOCIATED RISKS AND OTHER INFORMATION CONCERNING THE UNDERLYING

*Need to include details of where past and future performance and volatility of the index/formula/other variable can be obtained and a clear and comprehensive explanation of how the value of the investment is affected by the underlying and the circumstances when the risks are most evident. [Where the underlying is an index need to include the name of the index and a description if composed by the Issuer and if the index is not composed by the Issuer need to include details of where the information about the index can be obtained. Where the underlying is not an index need to include equivalent information. Include other information concerning the underlying required by Paragraph 4.2 of Annex XII of the Prospectus Directive Regulation.]**]

[(When completing this paragraph, consideration should be given as to whether such matters described constitute "significant new factors" and consequently trigger the need for a supplement to the Prospectus under Article 16 of the Prospectus Directive.)]

The Issuer [intends to provide post-issuance information *[specify what information will be reported and where it can be obtained]*] [does not intend to provide post-issuance information]*.

8. [*Dual Currency Notes only* – PERFORMANCE OF RATE[S] OF EXCHANGE AND EXPLANATION OF EFFECT ON VALUE OF INVESTMENT

*Need to include details of where past and future performance and volatility of the relevant rate[s] can be obtained and a clear and comprehensive explanation of how the value of the investment is affected by the underlying and the circumstances when the risks are most evident.] **

[(When completing this paragraph, consideration should be given as to whether such matters described constitute "significant new factors" and consequently trigger the need for a supplement to the Prospectus under Article 16 of the Prospectus Directive.)]

9. OPERATIONAL INFORMATION

ISIN Code: [ ]

Common Code: [ ]

Any clearing system(s) other than Euroclear Bank S.A./N.V. and Clearstream Banking, société anonyme and the relevant identification number(s):	[Not Applicable/*give name(s) and number(s)]*
Delivery:	Delivery [against/free of] payment
Names and addresses of initial Paying Agent(s):	[ ]
Names and addresses of additional Paying Agent(s) (if any):	[ ]
Intended to be held in a manner which would allow Eurosystem eligibility[20]:	[Yes][No] [Note that the designation "yes" simply means that the Notes are intended upon issue to be deposited with one of the ICSDs as common safekeeper and does not necessarily mean that the Notes will be recognized as eligible collateral for Eurosystem monetary policy and intra-day credit operations by the Eurosystem either upon issue or at any or all times during their life. Such recognition will depend upon the ECB being satisfied that Eurosystem eligibility criteria have been met.] [*include this text if "yes" selected in which case the Notes must be issued in NGN form*]

10. TERMS AND CONDITIONS OF THE OFFER[21]

Offer Price:[22]	[Issue Price][*specify*]
Conditions to which the offer is subject:[23]	[Not Applicable/*give details*]
Description of the application process:[24]	[Not Applicable/*give details*]
Description of possibility to reduce subscriptions and manner for refunding excess amount paid by applicants:[25]	[Not Applicable/*give detail*]
Details of the minimum and/or maximum amount of application:[26]	[Not Applicable/*give details*]
Details of the method and time limits for paying up and delivering the Notes:[27]	[Not Applicable/*give details*]
Manner in and date on which results of the offer are to be made public:[28]	[Not Applicable/*give details*]
Procedure for exercise of any right of pre-emption, negotiability of subscription rights and treatment of subscription rights not exercised:[29]	[Not Applicable/*give details*]
Categories of potential investors to which the Notes are offered and whether tranche(s) have been reserved for certain countries:[30]	[Not Applicable/*give details*]

Process for notification to applicants of the amount allotted and the indication whether dealing may begin before notification is made:[31]	[Not Applicable/*give details*]
Amount of any expenses and taxes specifically charged to the subscriber or purchaser:[32]	[Not Applicable/*give details*]
Name(s) and address(es), to the extent known to the Issuer, of the placers in the various countries where the offer takes place. [33]	[None/*give details*]

Notes

** Required for derivative securities to which Annex XII to the Prospectus Directive Regulation applies. See note 10 below.*

[1] *Include this legend where a non-exempt offer of Notes is anticipated.*

[2] *Include this legend where only an exempt offer of Notes is anticipated.*

[3] *This should reflect the name of the document.*

[4] *Leave blank in the pro forma final terms in the Prospectus.*

[5] *Only include details of a supplemental Prospectus in which the Conditions have been amended or information added for the purposes of all future issues under the Programme.*

[6] *Final terms and any supplement to the base prospectus must be made available to the public and published in accordance with Article 14 of the Prospectus Directive and Article 33 of the Prospectus Directive Regulation. Article 33 states that the publication method for the final terms does not need to be the same as that used for the base prospectus, as long as one of the methods indicated in Article 14 is used. Article 16 states that a supplement must be published with at least the same arrangements as were applied when the original base prospectus was published.*

Article 14 specifies the following alternative methods of publication:

(a) by insertion in one or more newspapers of the kind specified in Article 14(2)(a);

(b) in printed form to be made available, free of charge, to the public at:

(i) the offices of the market on which the securities are being admitted to trading; or

(ii) at the registered office of the issuer and at the offices of the financial intermediaries placing or selling the securities, including paying agents; or

(c) in an electronic form on the issuer's web-site and, if applicable, on the web-site of the financial intermediaries placing or selling the securities, including paying agents; or

(d) in an electronic form on the website of the regulated market where the admission to trading is sought; or

(e) in electronic form on the web-site of the competent authority of the home Member State if the said authority has decided to offer this service.

As well as filing the final terms with the home Member State, they may also need to be filed with host Member State(s). In addition, a home Member State (and some host Member States) may require publication of a notice stating how the final terms or any supplement have been made available and where they can be obtained by the public. Other local law requirements may also apply, see note 15 below.

[7] *Section 6: Add the following language if the programme allows for issues of securities with a maturity of less than one year and the issuer is not an authorised person permitted to accept deposits or an exempt person under the UK Financial Services and Markets Act 2000. Delete square-bracketed text for issuers incorporated in the UK or within section 418 FSMA. The issue of securities with a maturity of less than one year by such issuers, where the issue proceeds are to be accepted in the United Kingdom, or, in the case of issuers incorporated in the UK or within section 418 FSMA in any country, will be subject to section 19 FSMA unless their denomination is £100,000 or more (or its equivalent in other*

currencies) and they are only issued to "professionals" within Article 9(2)(a) of the Financial Services and Markets Act (Regulated Activities) Order 2001:

"Notes [(including Notes denominated in Sterling) in respect of which the issue proceeds are to be accepted by the issuer in the United Kingdom or whose issue otherwise constitutes a contravention of section 19 FSMA and] which have a maturity of less than one year must have a minimum redemption value of £100,000 (or its equivalent in other currencies)."

Add appropriate provisions to terms and conditions if included.

[8] *The applicable Calculation Amount (which is used for the calculation of interest and redemption amounts) will be (i) if there is only one Specified Denomination, the Specified Denomination of the relevant Notes or (ii) if there are several Specified Denominations, the highest common factor of those Specified Denominations (note: there must be a common factor in the case of two or more Specified Denominations). If "Calculation Amount" is to be used in the Final Terms, corresponding references to the Calculation Amount for interest, put and call options and redemption amount calculation purposes should be included in the terms and conditions set out in the base prospectus. Note that a Calculation Amount of less than 1,000 units of the relevant currency may result in practical difficulties for paying agents and/or ICSDs who should be consulted if such an amount is proposed.*

[9] *An Interest Commencement Date will not be relevant for certain Notes, for example Zero Coupon Notes.*

[10] *If the Final Redemption Amount is other than 100% of the nominal value the Notes will be derivative securities for the purposes of the Prospectus Directive and the requirements of Annex XII to the Prospectus Directive Regulation will apply. This pro forma has been annotated to indicate where the key additional requirements of Annex XII are dealt with.*

[11] *Consider whether the "senior" terminology is appropriate. See the ICMA paper "Description of Debt as "Senior" and the "Negative Pledge" Covenant, dated October 12, 2006.*

[12] *If the Conditions set out in the Prospectus do not include a term set out at paragraphs 18 or 22, e.g. Determination Date, Minimum Amount of Interest, Maximum Final Redemption Amount, then the relevant*

term should be deleted from the form of Final Terms set out in the Prospectus.

[13] *If setting notice periods which are different to those provided in the terms and conditions, issuers are advised to consider the practicalities of distribution of information through intermediaries, for example, clearing systems and custodians, as well as any other notice requirements which may apply, for example, as between the issuer and its fiscal agent or any trustee.*

[14] *Include if the programme allows a choice between new global notes ("NGNs") or classic global notes ("CGNs") or if the Programme specifies NGNs only. If the programme specifies NGNs only, state "Yes".*

[15] *A number of countries (for example, Iceland, Spain, Portugal and Italy) may require tax certification to enable interest to be paid gross by issuers. Consider including a term providing for tax certification where applicable.*

[16] *See the suggested standard form UK Debt Selling Restriction set out in Section A of Part IX of the ICMA Primary Market Handbook (or its replacement from time to time) in relation to "Non-exempt Offers" and the suggested legends for inclusion in the base prospectus in relation to exempt and non-exempt offers and the respective cross-references to the Final Terms.*

Consider any local regulatory requirements necessary to be fulfilled so as to be able to make a non-exempt offer in relevant jurisdictions. No such offer should be made in any relevant jurisdiction until those requirements have been met. Non-exempt offers may only be made into jurisdictions in which the base prospectus (and any supplement) has been notified/ passported. Consider including details of parties (if any) other than the Managers making non-exempt offers in relevant jurisdictions, to the extent known to the Issuer (see Paragraph 5.4.1 of Annex V of the PD Regulation and Paragraph 10 of Part B below). Alternatively, consider a generic description of other parties involved in non-exempt offers (e.g. "other parties authorised by the Managers) or (if relevant) note that other parties may make non-exempt offers in the specified jurisdictions during the offer period, in each case if not known to the Issuer.

The start date for non-exempt offers will typically be no earlier than the publication date of the Final Terms. The start date in certain jurisdictions) may need to be delayed until after compliance with any local requirements (e.g. publication of newspaper notices and accordingly may not necessarily be an actual date. For example, it could instead of a specific date be expressed as "the business day following publication of the [relevant notice]" or similar. The end date will be as agreed between the Issuer and the Managers.

[17] *Include the name of the relevant regulated market, for example the Bourse de Luxembourg, the London Stock Exchange's Gilt Edged and Fixed Interest Market or the Regulated Market of the Irish Stock Exchange and, if relevant, to admission to an official list, for example the official list of the UK Listing Authority. If the notes are not to be admitted to trading on a regulated market, consider one of the alternative Pro Forma Final Terms contained in the ICMA Primary Market Handbook.*

[18] *Include if third party information is provided, for example in compliance with Annex XII of the Prospectus Directive Regulation in relation to an index or its components, an underlying security or the issuer of an underlying security.*

[19] *Where a Trustee is involved in a Programme consider whether this item should be moved to Part A – Contractual Terms to reflect the fact that there is a maintenance of listing covenant in the Trust Deed. If a right to delist the Notes is applicable, consider including a reference to such right here and/or an appropriate risk factor in the base prospectus.*

[20] *Include if the programme allows a choice between NGNs or CGNs or if the Programme specifies NGNs only.*

[21] *Consider the circumstances in which the items specified below need to be completed or marked "Not Applicable" by reference to the requirements of the relevant home and/or host member states where any non-exempt public offer is being made, in compliance with the Prospectus Directive, as implemented in such member states.*

[22] *Paragraph 5.1.3 of Annex V.*

[23] *Paragraph 5.3.1 of Annex V.*

[24] *Paragraph 5.1.1 of Annex V.*

[25] *Paragraph 5.1.3 and 5.1.5 of Annex V.*

[26] *Paragraph 5.1.4 of Annex V.*

[27] *Paragraph 5.1.5 of Annex V.*

[28] *Paragraph 5.1.6 of Annex V.*

[29] *Paragraph 5.1.7 of Annex V.*

[30] *Paragraph 5.1.8 of Annex V.*

[31] *Paragraph 5.2.1 of Annex V.*

[32] *Paragraph 5.2.2 of Annex V.*

[33] *Paragraph 5.3.1 of Annex V.*

[34] *Paragraph 5.4.1 of Annex V.*

ICMA PRO FORMA FINAL TERMS FOR MEDIUM TERM NOTE PROGRAMMES FOR USE IN CONNECTION WITH ISSUES OF SECURITIES WITH A DENOMINATION OF AT LEAST €50,000 TO BE ADMITTED TO TRADING ON AN EEA REGULATED MARKET

The attached pro forma is intended to be used in circumstances where the Euro Medium Term Note Programme is subject to the Prospectus Directive, i.e. where the relevant Prospectus has been approved by the competent authority for the purpose of issuing Notes which are to be to be admitted to trading on an EEA regulated market and/or offered to the public (within the meaning of the Prospectus Directive) in the EEA and where the Notes issued in the drawdown have a denomination of at least €50,000. The disclosure is based on Annex XIII of the Prospectus Regulation.

It replaces the pro forma Final Terms published in May 2005.

The Prospectus Directive provides that if the final terms of an offer are not included in the base prospectus for a debt programme, or a supplement to it, they should be provided to investors and filed with the competent authority when each public offer is made as soon as practicable and if possible in advance of the beginning of the offer (Article 5(4)). The Prospectus Regulation provides that the final terms shall only contain the information items from the various securities note schedules according to which the base prospectus is drawn up (Article 22(4)). It also requires base prospectuses to indicate which information will be included in the final terms (Article 22(5)(1)). The base prospectus will typically contain the relevant form or forms of the final terms.

Issuers and their advisers should be aware that if securities are offered to the public in the EEA or admitted to trading on an EEA regulated market, it is the Issuer's responsibility to ensure that final terms are (i) filed with the regulatory authority that approved the base prospectus in accordance with Article 5(4) of the Prospectus Directive and (ii) published in accordance with Article 14 of the Prospectus Directive and Article 33 of the Prospectus Directive Regulation (see note 4 below).

When forwarding final terms to a relevant regulatory authority, issuers, their agents or advisers should take care to ensure that

the authority is aware of the purpose of the filing and in particular whether it is intended that the securities are to be admitted to trading on a regulated market and, if so, from what date. Final terms should not be submitted to a regulatory authority without specific instructions to do so and a clear understanding of the purpose of that submission. Application for admission to trading of notes should not be made in circumstances where a supplement to the base prospectus is required until such time as the supplement has been approved and published in accordance with the Prospectus Directive.

Final Terms dated •

[Name of Issuer]
Issue of **[Aggregate Nominal Amount of Tranche] [Title of Notes]**
[Guaranteed by **[Name of Guarantor]]**
under the **[insert Programme Amount] [Debt Issuance Programme]**

[Euro Medium Term Note Programme]

PART A – CONTRACTUAL TERMS

Terms used herein shall be deemed to be defined as such for the purposes of the Conditions set forth in the Prospectus[1] dated •[2] [and the supplemental Prospectus dated •][3] which [together] constitute[s] a base prospectus for the purposes of the Prospectus Directive (Directive 2003/71/EC) (the Prospectus Directive). This document constitutes the Final Terms of the Notes described herein for the purposes of Article 5.4 of the Prospectus Directive and must be read in conjunction with such Prospectus [as so supplemented]. Full information on the Issuer [, the Guarantor(s)] and the offer of the Notes is only available on the basis of the combination of these Final Terms and the Prospectus [as so supplemented]. The Prospectus [and the supplemental Prospectus] [is] [are] available for viewing [at [website]] [and] during normal business hours at [address] [and copies may be obtained from [address]].[4]

The following alternative language applies if the first tranche of an issue which is being increased was issued under a Prospectus with an earlier date.

Terms used herein shall be deemed to be defined as such for the purposes of the Conditions (the Conditions) set forth in the Prospectus[1] dated [original date] [and the supplemental Prospectus dated •][3]. This document constitutes the Final Terms of the Notes described herein for the purposes of Article 5.4 of the Prospectus Directive (Directive 2003/71/EC) (the Prospectus Directive) and must be read in conjunction with the Prospectus dated [current date] [and the supplemental Prospectus dated •][3], which [together] constitute[s] a base prospectus for the purposes of the Prospectus Directive, save in respect of the Conditions which are extracted from the Prospectus dated [original date] [and the supplemental Prospectus dated •] and are attached hereto. Full information on the Issuer [, the Guarantor(s)] and the offer of the Notes is only available on the basis of the combination

of these Final Terms and the Prospectuses dated [original date] and [current date] [and the supplemental Prospectuses dated • and •]. The Prospectuses [and the supplemental Prospectuses] are available for viewing [at [website] [and] during normal business hours at [address] [and copies may be obtained from [address]].[4]

[Include whichever of the following apply or specify as "Not Applicable" (N/A). Note that the numbering should remain as set out below, even if "Not Applicable" is indicated for individual paragraphs or sub-paragraphs. Italics denote guidance for completing the Final Terms.]

[When completing final terms or adding any other final terms or information consideration should be given as to whether such terms or information constitute "significant new factors" and consequently trigger the need for a supplement to the Prospectus under Article 16 of the Prospectus Directive.]

1.	[(i)] Issuer:	[ ]
	[[(ii) Guarantor:	[ ]]
2.	[(i)] Series Number:	[ ]
	[(ii) Tranche Number:	[ ]
	(If fungible with an existing Series, details of that Series, including the date on which the Notes become fungible).]	
3.	Specified Currency or Currencies:	[ ]
4.	Aggregate Nominal Amount of Notes:	[ ]
	[(i)] Series:	[ ]
	[(ii) Tranche:	[ ]]
5.	Issue Price:	[ ] per cent of the Aggregate Nominal Amount [plus accrued interest from [*insert date*] (*if applicable*)]

6.	(i)	Specified Denominations:	[ ][5, 6]
	(ii)	Calculation Amount:[7]	[ ]
7.	(i)	Issue Date:	[ ]
	(ii)	Interest Commencement Date	[*Specify*/Issue Date/Not Applicable[8]]
8.		Maturity Date:	[*Specify date or (for Floating Rate Notes) Interest Payment Date falling in or nearest to the relevant month and year*]
9.		Interest Basis:	[• per cent Fixed Rate] [[*specify reference rate*] +/– • per cent Floating Rate] [Zero Coupon] [Index Linked Interest] [Other (*specify*)] (further particulars specified below)
10.		Redemption/Payment Basis[9]:	[Redemption at par] [Index Linked Redemption] [Dual Currency] [Partly Paid] [Instalment] [Other (specify)]
11.		Change of Interest or Redemption/ Payment Basis:	[*Specify details of any provision for convertibility of Notes into another interest or redemption/ payment basis*]
12.		Put/Call Options:	[Investor Put] [Issuer Call] [(further particulars specified below)]
13.	[(i)]	Status of the Notes:	[Senior/[Dated/Perpetual]/ Subordinated][10]

[(ii)] Status of the Guarantee:	[Senior/[Dated/Perpetual]/ Subordinated]][10]
[(iii)] [Date [Board] approval for issuance of Notes [and Guarantee] obtained:	[ ] [and [ ], respectively]] (*N.B Only relevant where Board (or similar) authorisation is required for the particular tranche of Notes or related Guarantee*)]
14. Method of distribution:	[Syndicated/Non-syndicated]

PROVISIONS RELATING TO INTEREST (IF ANY) PAYABLE

15. Fixed Rate Note Provisions	[Applicable/Not Applicable] (*If not applicable, delete the remaining sub-paragraphs of this paragraph*)
(i) Rate[(s)] of Interest:	[ ] per cent per annum [payable [annually/semi-annually/quarterly/monthly/ other (*specify*)] in arrear]
(ii) Interest Payment Date(s):	[ ] in each year [adjusted in accordance with [*specify Business Day Convention and any applicable Business Centre(s) for the definition of "Business Day"*]/not adjusted]
(iii) Fixed Coupon Amount[(s)]:	[ ] per Calculation Amount
(iv) Broken Amount(s):	[ ] per Calculation Amount payable on the Interest Payment Date falling [in/on] [ ]
(v) Day Count Fraction:	[30/360 / Actual/Actual (ICMA/ISDA) / other]

(vi)	[Determination Dates:	[ ] in each year *(insert regular interest payment dates, ignoring issue date or maturity date in the case of a long or short first or last coupon. N.B. only relevant where Day Count Fraction is Actual/Actual (ICMA))*]
(vii)	Other terms relating to the method of calculating interest for Fixed Rate Notes:	[Not Applicable/*give details*]
16.	**Floating Rate Note Provisions**	[Applicable/Not Applicable] (*If not applicable, delete the remaining sub-paragraphs of this paragraph*)
(i)	Interest Period(s):	[ ]
(ii)	Specified Interest Payment Dates:	[ ]
(iii)	First Interest Payment Date:	[ ]
(iv)	Business Day Convention:	[Floating Rate Convention/ Following Business Day Convention/ Modified Following Business Day Convention/Preceding Business Day Convention/ other (*give details*)]
(v)	Business Centre(s):	[ ]
(vi)	Manner in which the Rate(s) of Interest is/are to be determined:	[Screen Rate Determination/ISDA Determination/other (*give details*)]

(vii) Party responsible for calculating the Rate(s) of Interest and/or Interest Amount(s) (if not the [Agent]): [ ]

(viii) Screen Rate Determination:

– Reference Rate: [ ]

– Interest Determination Date(s): [ ]

– Relevant Screen Page: [ ]

(ix) ISDA Determination:

– Floating Rate Option: [ ]

– Designated Maturity: [ ]

– Reset Date: [ ]

(x) Margin(s): [+/-][ ] per cent per annum

(xi) Minimum Rate of Interest: [ ] per cent per annum

(xii) Maximum Rate of Interest: [ ] per cent per annum

(xiii) Day Count Fraction: [ ]

(xiv) Fall back provisions, rounding provisions, denominator and any other terms relating to the method of calculating interest on Floating Rate Notes, if different from those set out in the Conditions: [ ]

17. Zero Coupon Note Provisions [Applicable/Not Applicable] (*If not applicable, delete the remaining sub-paragraphs of this paragraph*)

(i) [Amortisation/Accrual] Yield: [ ] per cent per annum

(ii) Reference Price: [ ]

(iii) Any other formula/basis of determining amount payable: [ ]

18. Index-Linked Interest Note/other variable-linked interest Note Provisions[9, 11] [Applicable/Not Applicable] (*If not applicable, delete the remaining sub-paragraphs of this paragraph*)

(i) Index/Formula/other variable: [*give or annex details*]

(ii) Party responsible for calculating the Rate(s) of Interest and/or Interest Amount(s) (if not the [Agent]): [ ]

(iii) Provisions for determining Coupon where calculated by reference to Index and/or Formula and/or other variable: [ ]

(iv) Determination Date(s): [ ]

(v) Provisions for determining Coupon where calculation by reference to Index and/or Formula and/or other variable is impossible or impracticable or otherwise disrupted: [ ]

(vi) Interest or calculation period(s): [ ]

(vii) Specified Interest Payment Dates: [ ]

(viii) Business Day Convention: [Floating Rate Convention/ Following Business Day Convention/Modified Following Business Day Convention/Preceding Business Day Convention/ other (*give details*)]

(ix) Business Centre(s): [ ]

(x) Minimum Rate/Amount of Interest: [ ] per cent per annum

(xi) Maximum Rate/Amount of Interest: [ ] per cent per annum

(xii) Day Count Fraction: [ ]

19. Dual Currency Note Provisions[9] [Applicable/Not Applicable] (*If not applicable, delete the remaining sub-paragraphs of this paragraph*)

(i) Rate of Exchange/method of calculating Rate of Exchange: [*give details*]

(ii) Party, if any, responsible for calculating the principal and/or interest due (if not the [Agent]) [ ]

(iii) Provisions applicable where calculation by reference to Rate of Exchange impossible or impracticable: [ ]

(iv) Person at whose option Specified Currency(ies) is/are payable: [ ]

PROVISIONS RELATING TO REDEMPTION

20. Call Option [Applicable/Not Applicable] (*If not applicable, delete the remaining sub-paragraphs of this paragraph*)

(i) Optional Redemption Date(s): [ ]

(ii)	Optional Redemption Amount(s) of each Note and method, if any, of calculation of such amount(s):	[ ] per Calculation Amount
(iii)	If redeemable in part:	
	(a) Minimum Redemption Amount:	[ ] per Calculation Amount
	(b) Maximum Redemption Amount:	[ ] per Calculation Amount
(iv)	Notice period[12]	[ ]

21. Put Option [Applicable/Not Applicable] (*If not applicable, delete the remaining sub-paragraphs of this paragraph*)

(i)	Optional Redemption Date(s):	[ ]
(ii)	Optional Redemption Amount(s) of each Note and method, if any, of calculation of such amount(s):	[ ] per Calculation Amount
(iii)	Notice period[12]	[ ]

22. Final Redemption Amount of each Note [9, 11] [ ] per Calculation Amount

In cases where the Final Redemption Amount is Index-Linked or other variable-linked:

(i)	Index/Formula/variable:	*[give or annex details]*
(ii)	Party responsible for calculating the Final Redemption Amount (if not the [Agent]):	[ ]

(iii) Provisions for determining Final Redemption Amount where calculated by reference to Index and/or Formula and/or other variable: [ ]

(iv) Determination Date(s): [ ]

(v) Provisions for determining Final Redemption Amount where calculation by reference to Index and/or Formula and/or other variable is impossible or impracticable or otherwise disrupted: [ ]

(vi) Payment Date:

(vii) Minimum Final Redemption Amount: [ ] per Calculation Amount

(viii) Maximum Final Redemption Amount: [ ] per Calculation Amount

23. Early Redemption Amount

Early Redemption Amount(s) per Calculation Amount payable on redemption for taxation reasons or on event of default or other early redemption and/or the method of calculating the same (if required or if different from that set out in the Conditions): [ ]

GENERAL PROVISIONS APPLICABLE TO THE NOTES

24. Form of Notes: **Bearer Notes:**[13]

[Temporary Global Note exchangeable for a Permanent Global Note which is exchangeable for Definitive Notes in

		the limited circumstances specified in the Permanent Global Note] [Temporary Global Note exchangeable for Definitive Notes on [ ] days' notice] [Permanent Global Note exchangeable for Definitive Notes in the limited circumstances specified in the Permanent Global Note]
25.	New Global Note:[14]	[Yes] [No]
26.	Financial Centre(s) or other special provisions relating to payment dates:	[Not Applicable/*give details. Note that this item relates to the date and place of payment, and not interest period end dates, to which items 15(ii), 16(v) and 18(ix) relates*]
27.	Talons for future Coupons or Receipts to be attached to Definitive Notes (and dates on which such Talons mature):	[Yes/No. *If yes, give details*]
28.	Details relating to Partly Paid Notes: amount of each payment comprising the Issue Price and date on which each payment is to be made and consequences (if any) of failure to pay, including any right of the Issuer to forfeit the Notes and interest due on late payment:	[Not Applicable/*give details*]
29.	Details relating to Instalment Notes: amount of each instalment, date on which each payment is to be made:	[Not Applicable/*give details*]

30.	Redenomination, renominalisation and reconventioning provisions:	[Not Applicable/The provisions [in Condition •] apply]
31.	Consolidation provisions:	[Not Applicable/The provisions [in Condition •] apply]
32.	Other final terms:[15]	[Not Applicable/give details] (*When adding any other final terms consideration should be given as to whether such terms constitute a "significant new factor" and consequently trigger the need for a supplement to the Prospectus under Article 16 of the Prospectus Directive.*)

DISTRIBUTION

33.	(i)	If syndicated, names of Managers:	[Not Applicable/*give names*]
	(ii)	Stabilising Manager(s) (if any):	[Not Applicable/*give name*]
34.		If non-syndicated, name of Dealer:	[Not Applicable/*give name*]
35.		US Selling Restrictions:	[Reg. S Compliance Category; TEFRA C/ TEFRA D/TEFRA not applicable]
36.		Additional selling restrictions:	[Not Applicable/*give details*]

[PURPOSE OF FINAL TERMS

These Final Terms comprise the final terms required for issue and admission to trading on the [*specify relevant regulated market*][16] of the Notes described herein pursuant to the [*insert Programme Amount*] [Debt Issuance Programme] [Euro Medium Term Note Programme] of •.]

RESPONSIBILITY

The Issuer [and the Guarantor] accept[s] responsibility for the information contained in these Final Terms. [(*Relevant third party information*) has been extracted from (*specify source*). [Each of the] [The] Issuer [and the Guarantor] confirms that such information has been accurately reproduced and that, so far as it is aware, and is able to ascertain from information published by (*specify source*), no facts have been omitted which would render the reproduced information inaccurate or misleading.][17]

Signed on behalf of [name of the Issuer]:

By: .....

Duly authorised

[Signed on behalf of [name of the Guarantor]:

By: .....

Duly authorised]

PART B – OTHER INFORMATION

1. LISTING[16, 18]

(i)	Admission to trading:	[Application has been made by the Issuer (or on its behalf) for the Notes to be admitted to trading on [*specify relevant regulated market*] with effect from [ ].] [Application is expected to be made by the Issuer (or on its behalf) for the Notes to be admitted to trading on [*specify relevant regulated market*] with effect from [ ].] [Not Applicable.] (*Where documenting a fungible issue need to indicate that original Notes are already admitted to trading.)*
(ii)	Estimate of total expenses related to admission to trading:	[ ]

2. RATINGS

Ratings:	The Notes to be issued have been rated: [S & P: [ ]] [Moody's: [ ]] [[Fitch: [ ]]

[[Other]: [ ]]
(*The above disclosure should reflect the rating allocated to Notes of the type being issued under the Programme generally or, where the issue has been specifically rated, that rating.*)

3. [INTERESTS OF NATURAL AND LEGAL PERSONS INVOLVED IN THE ISSUE/OFFER]

Need to include a description of any interest, including conflicting ones, that is material to the issue/offer, detailing the persons involved and the nature of the interest. May be satisfied by the inclusion of the following statement:

"Save as discussed in ["Subscription and Sale"], so far as the Issuer is aware, no person involved in the offer of the Notes has an interest material to the offer."]

[(When adding any other description, consideration should be given as to whether such matters described constitute "significant new factors" and consequently trigger the need for a supplement to the Prospectus under Article 16 of the Prospectus Directive.)]

4. [REASONS FOR THE OFFER, ESTIMATED NET PROCEEDS AND TOTAL EXPENSES

[(i) Reasons for the offer	[ ] (*See ["Use of Proceeds"] wording in Prospectus – if reasons for offer different from making profit and/or hedging certain risks will need to include those reasons here.)*]
[(ii)] Estimated net proceeds:	[ ] (*If proceeds are intended for more than one use will need to split out and*

present in order of priority. If proceeds insufficient to fund all proposed uses state amount and sources of other funding.)

[(iii) Estimated total expenses: [ ]
(*[If the Notes are derivative securities for which Annex XII of the Prospectus irective Regulation applies it is] only necessary to include disclosure of net proceeds and total expenses at (ii) and (iii) above where disclosure is included at (i) above.)*]*

5. [Fixed Rate Notes only – YIELD

Indication of yield: [ ]
The yield is calculated at the Issue Date on the basis of the Issue Price. It is not an indication of future yield.]

6. [Index-Linked or other variable-linked Notes only – PERFORMANCE OF INDEX/FORMULA/OTHER VARIABLE ANDOTHER INFORMATION CONCERNING THE UNDERLYING

*Need to include details of where past and future performance and volatility of the index/formula/other variable can be obtained. Where the underlying is an index need to include the name of the index and a description if composed by the Issuer and if the index is not composed by the Issuer need to include details of where the information about the index can be obtained. Where the underlying is not an index need to include equivalent information. Include other information concerning the underlying required by Paragraph 4.2 of Annex XII of the Prospectus Directive Regulation.]**

[(When completing this paragraph, consideration should be given as to whether such matters described constitute "significant new

factors" and consequently trigger the need for a supplement to the Prospectus under Article 16 of the Prospectus Directive.)]

The Issuer [intends to provide post-issuance information [*specify what information will be reported and where it can be obtained*]] [does not intend to provide post-issuance information]*.

7. [Dual Currency Notes only – PERFORMANCE OF RATE[S] OF EXCHANGE

*Need to include details of where past and future performance and volatility of the relevant rate[s] can be obtained.]**

[(When completing this paragraph, consideration should be given as to whether such matters described constitute "significant new factors" and consequently trigger the need for a supplement to the Prospectus under Article 16 of the Prospectus Directive.)]

8. OPERATIONAL INFORMATION

ISIN Code:	[ ]
Common Code:	[ ]
Any clearing system(s) other than Euroclear Bank S.A./N.V. and Clearstream Banking, société anonyme and the relevant identification number(s):	[Not Applicable/*give name(s) and number(s)*]
Delivery:	Delivery [against/free of] payment
Names and addresses of initial Paying Agent(s):	[ ]
Names and addresses of additional Paying Agent(s) (if any):	[ ]

Intended to be held in a manner which would allow Eurosystem eligibility[19]:	[Yes][No] [Note that the designation "yes" simply means that the Notes are intended upon issue to be deposited with one of the ICSDs as common safekeeper and does not necessarily mean that the Notes will be recognized as eligible collateral for Eurosystem monetary policy and intra day credit operations by the Eurosystem either upon issue or at any or all times during their life. Such recognition will depend upon the ECB being satisfied that Eurosystem eligibility criteria have been met.] *[include this text if "yes" selected in which case the Notes must be issued in NGN form*]

Notes

** Required for derivative securities to which Annex XII to the Prospectus Directive Regulation applies. See note 9 below.*

[1] This should reflect the name of the document.

[2] Leave blank in the pro forma final terms in the Prospectus.

[3] Only include details of a supplemental Prospectus in which the Conditions have been amended or information added for the purposes of all future issues under the Programme.

[4] Final terms and any supplement to the base prospectus must be made available to the public and published in accordance with Article 14 of the Prospectus Directive and Article 33 of the Prospectus Directive Regulation. Article 33 states that the publication method for the final

terms does not need to be the same as that used for the base prospectus, as long as one of the methods indicated in Article 14 is used. Article 16 states that a supplement must be published with at least the same arrangements as were applied when the original base prospectus was published.

Article 14 specifies the following alternative methods of publication:

(a) by insertion in one or more newspapers of the kind specified in Article 14(2)(a);

(b) in printed form to be made available, free of charge, to the public at:

(i) the offices of the market on which the securities are being admitted to trading; or

(ii) at the registered office of the issuer and at the offices of the financial intermediaries placing or selling the securities, including paying agents; or

(c) in an electronic form on the issuer's website and, if applicable, on the website of the financial intermediaries placing or selling the securities, including paying agents; or

(d) in an electronic form on the website of the regulated market where the admission to trading is sought; or

(e) in electronic form on the website of the competent authority of the home Member State if the said authority has decided to offer this service.

As well as filing the final terms with the home Member State, they may also need to be filed with host Member State(s).

[5] *Section 6: Add the following language if the programme allows for issues of securities with a maturity of less than one year and the issuer is not an authorised person permitted to accept deposits or an exempt person under the UK Financial Services and Markets Act 2000. Delete square-bracketed text for issuers incorporated in the UK or within section 418 FSMA. The issue of securities with a maturity of less than one year by such issuers, where the issue proceeds are to be accepted in the United Kingdom, or, in the case of issuers incorporated in the UK or within section 418 FSMA in any country, will be subject to section 19 FSMA*

unless their denomination is £100,000 or more (or its equivalent in other currencies) and they are only issued to "professionals" within Article 9(2)(a) of the Financial Services and Markets Act (Regulated Activities) Order 2001:

"Notes [(including Notes denominated in Sterling) in respect of which the issue proceeds are to be accepted by the issuer in the United Kingdom or whose issue otherwise constitutes a contravention of Section 19 FSMA and] which have a maturity of less than one year must have a minimum redemption value of £100,000 (or its equivalent in other currencies)."

Add appropriate provisions to terms and conditions if included.

[6] *If the specified denomination is expressed to be €50,000 or its equivalent and multiples of a lower principal amount (for example €1,000), insert the additional wording set out in the Guidance Note published by ICMA in November 2006 (or its replacement from time to time) as follows.*

"€50,000 and integral multiples of [€1,000] in excess thereof up to and including [€99,000]. No notes in definitive form will be issued with a denomination above [€99,000]."

[7] *The applicable Calculation Amount (which is used for the calculation of interest and redemption amounts) will be (i) if there is only one Specified Denomination, the Specified Denomination of the relevant Notes or (ii) if there are several Specified Denominations or the circumstances referred to in Note 6 above apply (e.g. Specified Denominations of €50,000 and multiples of €1,000), the highest common factor of those Specified Denominations (note: there must be a common factor in the case of two or more Specified Denominations). If "Calculation Amount" is to be used in the Final Terms, corresponding references to the Calculation Amount for interest, put and call options and redemption amount calculation purposes should be included in the terms and conditions set out in the base prospectus. Note that a Calculation Amount of less than 1,000 units of the relevant currency may result in practical difficulties for paying agents and/or ICSDs who should be consulted if such an amount is proposed.*

[8] *An Interest Commencement Date will not be relevant for certain Notes, for example Zero Coupon Notes.*

[9] *If the Final Redemption Amount is other than 100% of the nominal value, the Notes will be derivative securities for the purposes of the Prospectus Directive and the requirements of Annex XII to the Prospectus Directive Regulation will apply. This pro forma has been annotated to indicate where the key additional requirements of Annex XII are dealt with. Note that some regulatory authorities may require the inclusion of information or placeholders addressing Paragraph 5 of Annex XII even though (noting that such information is not required by Annex XIII) the denomination of the Notes is €50,000 or more. Where Annex XII is not applicable but income on the Notes is linked to an underlying, nevertheless consider including disclosure in relation to the underlying.*

[10] *Consider whether the "senior" terminology is appropriate. See the ICMA paper "Description of Debt as Senior and the Negative Pledge Covenant", dated October 12, 2006.*

[11] *If the Conditions set out in the Prospectus do not include a term set out at paragraphs 18 or 22, e.g. Determination Date, Minimum Amount of Interest, Maximum Final Redemption Amount, then the relevant term should be deleted from the form of Final Terms set out in the Prospectus.*

[12] *If setting notice periods which are different to those provided in the terms and conditions, issuers are advised to consider the practicalities of distribution of information through intermediaries, for example, clearing systems and custodians, as well as any other notice requirements which may apply, for example, as between the issuer and its fiscal agent or any trustee.*

[13] *The exchange upon notice/at any time options should not be expressed to be applicable if the Specified Denominations of the Notes in paragraph 6 includes language that reflects the circumstances referred to in Note 7 above (for example Specified Denominations of €50,000 and multiples of €1,000).*

[14] *Include if the programme allows a choice between new global notes ("NGNs") or classic global notes ("CGNs") or if the Programme specifies NGNs only. If the programme specifies NGNs only, state "Yes".*

[15] *A number of countries (for example, Iceland, Spain, Portugal and Italy) may require tax certification to enable interest to be paid gross by issuers. Consider including a term providing for tax certification where applicable.*

[16] *Include the name of the relevant regulated market, for example the Bourse de Luxembourg, the London Stock Exchange's Gilt Edged and Fixed Interest Market or the Regulated Market of the Irish Stock Exchange and, if relevant, to admission to an official list, for example the Official List of the UK Listing Authority. If the notes are not to be admitted to trading on a regulated market, consider one of the alternative Pro Forma Final Terms contained in the ICMA Primary Market Handbook.*

[17] *Include if third party information is provided, for example in compliance with Annex XII of the Prospectus Directive Regulation in relation to an index or its components, an underlying security or the issuer of an underlying security.*

[18] *Where a Trustee is involved in a Programme consider whether this item should be moved to Part A – Contractual Terms to reflect the fact that there is a maintenance of listing covenant in the Trust Deed. If a right to delist the Notes is applicable, consider including a reference to such right here and/or an appropriate risk factor in the base prospectus.*

[19] *Include if the programme allows a choice between NGNs or CGNs or if the programme specifies NGNs only.*

PRO FORMA FINAL TERMS FOR MEDIUM TERM NOTE PROGRAMMES FOR USE IN CONNECTION WITH ISSUES OF SECURITIES ADMITTED TO TRADING ON THE UK PROFESSIONAL SECURITIES MARKET

The attached pro forma is designed for use in programmes for securities to be admitted to trading on the Professional Securities Market (PSM) of the London Stock Exchange.

It replaces the pro forma Final Terms published in January 2006.

The PSM is not a "regulated market" for the purposes of the Prospectus Directive (Directive 2003/71/EC) and therefore notes admitted to trading on the PSM will be outside the scope of the Directive, provided that no offer to the public within the meaning of the Directive (other than an offer which falls within one of the exemptions set out in Article 3(2) of the Directive) is made in any EEA state. However, although securities admitted to trading on the PSM are outside the scope of the Prospectus Directive regime, the disclosure requirements are substantially based on Prospectus Directive disclosure requirements for wholesale debt.

Content requirements for listing particulars for debt securities admitted to the Official List of the FSA and to trading on the PSM are set out in the FSA's Listing Rules in Chapter 4. Listing Rule 4.2.4 specifies the minimum information to be included in listing particulars:

- **Bonds:** For an issue of bonds, LR 4.2.4(1) R specifies that the minimum information is that required by the schedules in the Prospectus Directive Regulation (Regulation 809/2004, referred to in the FSA rules as the PD Regulation) applicable to debt and derivative securities with a denomination per unit of at least €50,000. These schedules, commonly known as the "wholesale" schedules, are Annex IX and Annex XIII of the PD Regulation. The wholesale schedules will be applicable irrespective of the denomination of the issue to be admitted to trading on the PSM.

  For notes with denominations of less than €50,000, however, issuers will need to be particularly careful to make sure that they do not, inadvertently, make an offer to the public (other than an offer which falls within one of the exemptions set out in Article

3(2) of the Directive) in any EEA state, thus triggering the need for a Prospectus Directive-compliant prospectus.

- **Guaranteed issues:** For guaranteed issues, LR 4.2.4(6) R requires the information as set out in the guarantee building block.

- **Other issues:** LR 4.2.5 G states that for issues not specifically described in LR 4.2.4 R, the FSA would expect issuers to follow the most appropriate schedules and building blocks in the PD Regulation to determine the minimum information to be included in listing particulars.

FINAL TERMS[2] dated •

LR 4.2.3 R / PR 2.2.9 R[1]

[Name of Issuer]
Issue of [Aggregate Nominal Amount of Tranche] [Title of Notes]

LR 4.2.4 R / Annex IX 4.1.1

[Guaranteed by [Name of Guarantor]]
under the *[insert Programme Amount]* [Debt Issuance Programme]
[Euro Medium Term Note Programme]

LR 4.2.4 R / Annex XIII, 4.1

PART A – CONTRACTUAL TERMS

Terms used herein shall be deemed to be defined as such for the purposes of the Conditions set forth in the listing particulars[3] dated •[4] [and the supplemental listing particulars dated •][5] which [together] constitute[s] listing particulars for the purposes of Chapter 4 of the FSA's Listing Rules. This document constitutes the final terms for the Notes described herein and must be read in conjunction with such listing particulars [as so supplemented].

LR 4.3.5 R / PR 3.2 R

The listing particulars [and the supplemental listing particulars] are available for viewing [at [website]] [and] during normal business hours at [address] [and copies may be obtained from [address]].[6]

The following alternative language applies if the first tranche of an issue which is being increased was issued under listing particulars with an earlier date.

Terms used herein shall be deemed to be defined as such for the purposes of the Conditions (the **Conditions**) set forth in the listing particulars dated [original date] [and the supplemental listing particulars dated •][5]. This document constitutes the final terms of the Notes described herein and must be read in conjunction with the listing particulars dated [current date] [and the supplemental listing particulars dated •], save in respect of the Conditions which are extracted from the listing particulars dated [original date] [and the supplemental listing particulars dated •] and are attached hereto.

LR 4.3.5 R / PR 3.2 R

The listing particulars [and the supplemental listing particulars] are available for viewing [at [website]] [and] during normal business hours at [address] [and copies may be obtained from [address]].[6]

[*Include whichever of the following apply or specify as "Not Applicable" (N/A). Note that the numbering should remain as set out below, even if "Not Applicable" is indicated for individual paragraphs or sub-paragraphs. Italics denote guidance for completing the final terms.*]

1.	[(i)] Issuer:	[ ]	
	[[(ii) Guarantor:	[ ]]	
2.	[(i)] Series Number:	[ ]	
	[(ii) Tranche Number:	[ ]	
	(If fungible with an existing Series, details of that Series, including the date on which the Notes become fungible).]		
3.	Specified Currency or Currencies:	[ ]	LR 4.2.4 R / Annex XIII, 4.5
4.	Aggregate Nominal Amount of Notes admitted to trading:	[ ]	LR 4.2.4. R / Annex XIII, 4.1
	[(i)] Series:	[ ]	
	[(ii) Tranche:	[ ]]	
5.	Issue Price:	[ ] per cent of the Aggregate Nominal Amount [plus accrued interest from [*insert date*] (*if applicable*)]	(Although not required in XIII presumably would include.)
6.	(i) Specified Denominations:	[ ][7, 8]	LR 4.2.4 R / Annex XIII, 4.13
	(ii) Calculation Amount[9]	[ ]	
7.	(i) Issue Date:	[ ]	LR 4.2.4 R / Annex XIII, 4.8
	(ii) Interest Commencement Date:	[*Specify*/Issue Date/Not Applicable][10]	

8.	Maturity Date:	[*specify date or (for Floating Rate Notes) Interest Payment Date falling in or nearest to the relevant month and year*]	LR 4.2.4 R / Annex XIII, 4.9
9.	Interest Basis:	[• per cent Fixed Rate] [[*specify reference rate*] +/– • per cent Floating Rate] [Zero Coupon] [Index Linked Interest] [Other (specify)] (further particulars specified below)	LR 4.2.4 R / Annex XIII, 4.8
10.	Redemption/Payment Basis[11]:	[Redemption at par] [Index Linked Redemption] [Dual Currency] [Partly Paid] [Instalment] [Other (*specify*)]	LR 4.2.4 R / Annex XIII, 4.9
11.	Change of Interest or Redemption/Payment Basis	[*Specify details of any provision for convertibility of Notes into another interest or redemption/ payment basis*]	
12.	Put/Call Options:	[Investor Put] [Issuer Call] [(further particulars specified below)]	
13.	[(i)] Status of the Notes:	[Senior/[Dated/Perpetual]/ Subordinated] [12]	LR 4.2.4 R / Annex XIII, 4.6
	[(ii)] Status of the Guarantee:	[Senior/[Dated/Perpetual]/ Subordinated]] [12]	

[(iii)]	[Date [Board] approval for issuance of Notes [and Guarantee] obtained:	[ ] [and [ ], respectively]] (*N.B Only relevant where Board (or similar) authorisation is required for the particular tranche of Notes or related Guarantee*)]

LR 4.2.4 R / Annex XIII, 4.12

14. Method of distribution: [Syndicated/Non-syndicated]

PROVISIONS RELATING TO INTEREST (IF ANY) PAYABLE

15.	**Fixed Rate Note Provisions**	[Applicable/Not Applicable] (*If not applicable, delete the remaining sub-paragraphs of this paragraph*)
(i)	Rate[(s)] of Interest:	[ ] per cent per annum [payable [annually/semi-annually/quarterly/monthly] in arrear]
(ii)	Interest Payment Date(s):	[ ] in each year [adjusted in accordance with [*specify Business Day Convention and any applicable Business Centre(s) for the definition of "Business Day" that is not already provided for in the Conditions*]/not adjusted]
(iii)	Fixed Coupon Amount[(s)]:	[ ] per Calculation Amount
(iv)	Broken Amount(s):	[ ] per Calculation Amount, payable on the Interest Payment Date falling [in/on] [ ]
(v)	Day Count Fraction:	[30/360 / Actual/Actual (ICMA /ISDA) / other]

(vi)	Determination Dates:	[ ] in each year (*insert regular interest payment dates, ignoring issue date or maturity date in the case of a long or short first or last coupon. N.B. only relevant where Day Count Fraction is Actual/Actual (ICMA)*)
(vii)	Other terms relating to the method of calculating interest for Fixed Rate Notes:	[Not Applicable/*give details*]
16.	**Floating Rate Note Provisions**	[Applicable/Not Applicable] (*If not applicable, delete the remaining sub-paragraphs of this paragraph*)
(i)	Interest Period(s):	[ ]
(ii)	Specified Interest Payment Dates:	[ ]
(iii)	First Interest Payment Date:	[ ]
(iv)	Business Day Convention:	[Floating Rate Convention/ Following Business Day Convention/ Modified Following Business Day Convention/ Preceding Business Day Convention/ other (*give details*)]
(v)	Business Centre(s):	[ ]
(vi)	Manner in which the Rate(s) of Interest is/are to be determined:	[Screen Rate Determination/ISDA Determination/other (*give details*)]

(vii) Party responsible for calculating the Rate(s) of Interest and/or Interest Amount(s) (if not the [Agent]): [ ]

(viii) Screen Rate Determination:

– Reference Rate: [ ]

– Interest Determination Date(s): [ ]

– Relevant Screen Page: [ ]

(ix) ISDA Determination:

– Floating Rate Option: [ ]

– Designated Maturity: [ ]

– Reset Date: [ ]

(x) Margin(s): [+/-][ ] per cent per annum

(xi) Minimum Rate of Interest: [ ] per cent per annum

(xii) Maximum Rate of Interest: [ ] per cent per annum

(xiii) Day Count Fraction: [ ]

(xiv) Fall back provisions, rounding provisions, denominator and any other terms relating to the method of calculating interest on Floating Rate Notes, if different from those set out in the Conditions: [ ]

17. Zero Coupon Note Provisions [Applicable/Not Applicable] (*If not applicable, delete the remaining sub-paragraphs of this paragraph*)

(i) [Amortisation/Accrual] Yield: [ ] per cent per annum

	(ii) Reference Price:	[ ]	
	(iii) Any other formula/basis of determining amount payable:	[ ]	
18.	**Index-Linked Interest Note/other variable-linked interest Note Provisions**[11, 13]	[Applicable/Not Applicable] *(if not applicable delete the remaining sub-paragraphs of this paragraph*)	
	(i) Index/Formula/other variable:	[*give or annex details*]	
	(ii) Party responsible for calculating the Rate(s) of Interest and/or Interest Amount(s) (if not the [Agent]):	[ ]	
	(iii) Provisions for determining Coupon where calculated by reference to Index and/or Formula and/or other variable:	[ ]	
	(iv) Determination Date(s)[13]:	[ ]	
	(v) Provisions for determining Coupon where calculation by reference to Index and/or Formula and/or other variable is impossible or impracticable or otherwise disrupted:	[ ]	LR 4.2.4 R / Annex XIII, 4.8
	(vi) Interest or calculation period(s):	[ ]	
	(vii) Specified Interest Payment Dates:	[ ]	
	(viii) Business Day Convention:	[Floating Rate Convention/ Following Business Day Convention/Modified Following Business Day Convention/Preceding Business Day Convention/ other (*give details*)]	

(ix) Business Centre(s): [ ]

(x) Minimum Rate/Amount of Interest: [ ] per cent per annum

(xi) Maximum Rate/Amount of Interest: [ ] per cent per annum

(xii) Day Count Fraction: [ ]

19. Dual Currency Note Provisions[11] [Applicable/Not Applicable] (*If not applicable, delete the remaining sub-paragraphs of this paragraph*)

(i) Rate of Exchange/method of calculating Rate of Exchange: [*give details*]

(ii) Party responsible for calculating the Rate(s) of Interest and Interest Amount(s) (if not the [Agent]): [ ]

(iii) Provisions applicable where calculation by reference to Rate of Exchange impossible or impracticable: [ ] LR 4.2.4 R / Annex XIII, 4.8

(iv) Person at whose option Specified Currency(ies) is/are payable: [ ]

PROVISIONS RELATING TO REDEMPTION

20. Call Option [Applicable/Not Applicable] (*If not applicable, delete the remaining sub-paragraphs of this paragraph*)

(i) Optional Redemption Date(s): [ ]

(ii) Optional Redemption Amount(s) of each Note specified denomination and [ ] per Calculation Amount

	method, if any, of calculation of such amount(s):	
	(iii) If redeemable in part:	
	(a) Minimum Redemption Amount:	[ ] per Calculation Amount
	(b) Maximum Redemption Amount	[ ] per Calculation Amount
	(iv) Notice period[15]:	[ ]
21.	**Put Option**	[Applicable/Not Applicable] (*If not applicable, delete the remaining sub-paragraphs of this paragraph*)
	(i) Optional Redemption Date(s):	[ ]
	(ii) Optional Redemption Amount(s) of each Note and method, if any, of calculation of such amount(s):	[ ] per Calculation Amount
	(iii) Notice period[15]	[ ]
22.	**Final Redemption Amount of each Note[11, 13]**	[[ ] per Calculation Amount
	In cases where the Final Redemption Amount is Index-Linked or other variable-linked:	[*give or annex details*]
	(i) Index/Formula/variable:	[ ]
	(ii) Calculation Agent responsible for calculating the Final Redemption Amount:	[ ]

(iii) Provisions for determining Final Redemption Amount where calculated by reference to Index and/or Formula and/or other variable: [ ]

(iv) Determination Date(s)[14]: [ ]

(v) Provisions for determining Final Redemption Amount where calculation by reference to Index and/or Formula and/or other variable is impossible or impracticable or otherwise disrupted: [ ]

(vi) Payment Date[16]: [ ]

(vii) Minimum Final Redemption Amount: [ ] per Calculation Amount

(viii) Maximum Final Redemption Amount: [ ] per Calculation Amount

23. Early Redemption Amount

Early Redemption Amount(s) per Calculation Amount payable on redemption for taxation reasons or on event of default or other early redemption and/or the method of calculating the same (if required or if different from that set out in the Conditions): [ ]

GENERAL PROVISIONS APPLICABLE TO THE NOTES

24. Form of Notes: **Bearer Notes:** [17]

[Temporary Global Note exchangeable for a Permanent Global Note

		which is exchangeable for Definitive Notes in the limited circumstances specified in the Permanent Global Note] [Temporary Global Note exchangeable for Definitive Notes on [ ] days' notice] [Permanent Global Note exchangeable for Definitive Notes in the limited circumstances specified in the Permanent Global Note] [Registered Notes]
25.	New Global Note:[18]	[Yes][No]
26.	Financial Centre(s) or other special provisions relating to Payment Dates:	[Not Applicable/*give details. Note that this paragraph relates to the date and place of payment, and not interest period end dates, to which paragraphs 15 (ii), 16(iv) and 18(ix) relate*]
27.	Talons for future Coupons or Receipts to be attached to Definitive Notes (and dates on which such Talons mature):	[Yes/No. *If yes, give details*]
28.	Details relating to Partly Paid Notes: amount of each payment comprising the Issue Price and date on which each payment is to be made and consequences (if any) of failure to pay, including any right of the Issuer to forfeit the Notes and interest due on late payment:	[Not Applicable/*give details*]

29.	Details relating to Instalment Notes: amount of each instalment, date on which each payment is to be made:	[Not Applicable/*give details*]	LR 4.2.4 R / Annex XIII, 4.9
30.	Redenomination,	[Not Applicable/The renominalisation and provisions [in reconventioning provisions: Condition •] apply]	
31.	Consolidation provisions:	[Not Applicable/The provisions [in Condition •] apply]	
32	Other final terms:	[Not Applicable/*give details*]	

DISTRIBUTION

33.	(i)	If syndicated, names of Managers:	[Not Applicable/*give names*]	(Although not required in XIII presumably would include names of syndicate.)
	(ii)	Stabilising Manager(s) (if any):	[Not Applicable/*give name*]	
34.		If non-syndicated, name of Dealer:	[Not Applicable/*give name*]	
35.		US Selling Restrictions:	[Reg. S Compliance Category; TEFRA C/TEFRA D/ TEFRA not applicable]	
36.		Additional selling restrictions:	[Not Applicable/*give details*]	

[PURPOSE OF FINAL TERMS

These final terms comprise the final terms required to have admitted to the Official List of the FSA and admitted to trading to the Professional Securities Market of the London Stock Exchange plc the issue of Notes described herein pursuant to the [insert Programme Amount] [Debt Issuance Programme] [Euro Medium Term Note Programme] of •.] LR 4.2.4 R / Annex XIII, 1

RESPONSIBILITY

LR 4.2.4 R / Annex XIII, 7.4

The Issuer [and the Guarantor] accept[s] responsibility for the information contained in these final terms. [• has been extracted from •. [Each of the] [The] Issuer [and the Guarantor] confirms that such information has been accurately reproduced and that, so far as it is aware, and is able to ascertain from information published by •, no facts have been omitted which would render the reproduced information inaccurate or misleading.][19]

Signed on behalf of [name of the Issuer]:

By: .....
Duly authorised

[Signed on behalf of [name of the Guarantor]:

By: .....
Duly authorised]

PART B – OTHER INFORMATION

1. LISTING[20]

(i)	Listing:	[London PSM]	LR 4.2.4 R / Annex XIII, 5.1
(ii)	Admission to trading:	[Application has been made for the Notes to be admitted to the Official List of the FSA and to trading on the Professional Securities Market of the London Stock Exchange].	
(iii)	Estimate of total expenses related to admission to trading:	[ ]	LR 4.2.4 R / Annex XIII, 6

2. RATINGS

Ratings:	The Notes to be issued have been rated: [S & P: [ ]] [Moody's: [ ]] [Fitch: [ ]] [[Other]: [ ]] (*The above disclosure should reflect the rating allocated to Notes of the type being issued under the Programme generally or, where the issue has been specifically rated, that rating.*)	LR 4.2.4 R / Annex XIII, 7.5

3. [INTERESTS OF NATURAL AND LEGAL PERSONS INVOLVED IN THE [ISSUE/OFFER]

LR 4.2.4 R / Annex XIII, 3

Need to include a description of any interest, including conflicting ones, that is material to the issue/offer, detailing the persons involved and the nature of the interest. May be satisfied by the inclusion of the following statement:

"Save as discussed in ["Subscription and Sale"], so far as the Issuer is aware, no person involved in the offer of the Notes has an interest material to the offer."]

[4. REASONS FOR THE OFFER, ESTIMATED NET PROCEEDS AND TOTAL EXPENSES

LR 4.2.4 R / Annex XII, 3.2

[(i) Reasons for the offer [ ]

(*See ["Use of Proceeds"] wording in listing particulars – if reasons for offer different from making profit and/or hedging certain risks will need to include those reasons here.*)]

[(ii)] Estimated net proceeds: [ ]

[(iii)] Estimated total expenses: [ ]

(*If the Notes are derivative securities to which Annex XII of the PD Regulation would apply, it is only necessary to include disclosure of net proceeds and total expenses at (ii) and (iii) above where disclosure is included at (i) above.*)][11]

5. [Fixed Rate Notes only – YIELD

LR 4.2.4 R / Annex XIII, 4.10

Indication of yield: [ ]

The yield is calculated at the Issue Date on the basis of the Issue Price. It is not an indication of future yield.]

6. [Index-Linked or other variable-linked Notes only – PERFORMANCE OF INDEX/FORMULA/OTHER VARIABLE AND OTHER INFORMATION CONCERNING THE UNDERLYING

LR 4.2.4 R / Annex XII, 4.2.2

Need to include details of where past and future performance and volatility of the index/formula/other variable can be obtained. Where the underlying is an index need to include the name of the index and a description if composed by the Issuer and if the index is not composed by the Issuer need to include details of where the information about the index can be obtained. Where the underlying is not an index need to include equivalent information. Include other information concerning the underlying required by Paragraph 4.2 of Annex XII of the PD Regulation.][11]

The Issuer [intends to provide post-issuance information *[specify what information will be reported and where it can be obtained]*] [does not intend to provide post-issuance information].

7. [*Dual Currency Notes only* – PERFORMANCE OF RATE[S] OF EXCHANGE

LR 4.2.4 R / Annex XII, 4.2.2

Need to include details of where past and future performance and volatility of the relevant rate[s] can be obtained.][11]

8. OPERATIONAL INFORMATION

LR 4.2.4 R / Annex XIII, 4.2

ISIN Code:	[ ]
Common Code:	[ ]
Any clearing system(s) other than Euroclear Bank S.A./N.V. and Clearstream Banking, société anonyme and the relevant identification number(s):	[Not Applicable/*give name(s) and number(s)*]
Delivery:	Delivery [against/free of] payment
Intended to be held in a manner which would allow Eurosystem eligibility[21]	[Yes][No] [Note that the designation "yes" simply means that the Notes are intended upon issue to be deposited with one of the ICSDs as common safekeeper and does not necessarily mean that the Notes will be recognized as eligible collateral for Eurosystem monetary policy and intra-day credit operations by the Eurosystem either upon issue or at any or all times during their life. Such recognition will depend upon the ECB being satisfied that Eurosystem eligibility criteria have been met.] [*include this text if "yes" selected in which case the Notes must be issued in NGN form*]

LR 4.2.4 R / Annex XIII, 5.2

Names and addresses of additional Paying Agent(s) (if any): [ ]

Notes

[1] *The margin annotations are to the FSA's Listing Rules (LR) and also to the FSA's Prospectus Rules (PR) and the Annexes of the PD Regulation. This is because the relevant provisions in Chapter 4 of the Listing Rules (Listing particulars for professional securities market and certain other securities), such as LR 4.2.4 (Minimum information to be included) and LR 4.3.5 (Filing and publication of listing particulars etc), cross refer to the PD Regulation Prospectus Rules. The annotations should be removed in the final version.*

[2] *Amend, as appropriate, to reflect terminology used in Programme (for example, pricing supplement). This draft uses the phrase final terms, rather than pricing supplement, throughout. (The FSA's Listing Rule 4.2.3 (Format of listing particulars) provides that listing particulars must be in a format that complies with the relevant requirements in PR 2.2 and the PD Regulation (as if those requirements applied to the listing particulars). PR 2.2.9 R refers to final terms.)*

[3] *This should reflect the name of the document. (This draft uses the phrase "listing particulars" to reflect the terminology used in Chapter 4 of the FSA's Listing Rules.)*

[4] *Leave blank in the pro forma final terms in the listing particulars.*

[5] *Only include details of supplemental listing particulars in which the Conditions have been amended for the purposes of all future issues under the Programme.*

[6] *FSA Listing Rule LR 4.3.5 R states that an issuer must ensure that after listing particulars or supplementary listing particulars are approved by the FSA, the listing particulars or supplementary listing particulars are filed and published as if the relevant requirements of PR 3.2 R and the PD Regulation applied to them.*

Pursuant to PR 3.2.4 R, a prospectus is deemed to be made available to the public for the purposes of PR 3.2.1 R to PR 3.2.3 R when published either: (1) by insertion in one or more newspapers circulated throughout,

or widely circulated in, the EEA States in which the offer is made or the admission to trading is sought; or (2) in a printed form to be made available, free of charge, to the public at the offices of the regulated market on which the transferable securities are being admitted to trading, or at the registered office of the issuer and at the offices of the financial intermediaries placing or selling the transferable securities, including paying agents; or (3) in an electronic form on the issuer's website and, if applicable, on the website of the financial intermediaries placing or selling the transferable securities, including paying agents; or (4) in an electronic form on the website of the regulated market on which admission to trading is sought.

[7] *Section 6: Add the following language if the Programme allows for issues of Notes with a maturity of less than one year and the issuer is not an authorised person permitted to accept deposits or an exempt person under the UK Financial Services and Markets Act 2000 ("FSMA"). Delete square-bracketed text for issuers incorporated in the UK or within section 418 FSMA. The issue of Notes with a maturity of less than one year by such issuers, where the issue proceeds are to be accepted in the UK, or, in the case of issuers incorporated in the UK or within section 418 FSMA in any other country, will be subject to section 19 FSMA unless their denomination is £100,000 or more (or its equivalent in other currencies) and they are only issued to "professionals" within Article 9(2)(a) of the Financial Services and Markets Act (Regulated Activities) Order 2001:*

"Notes [(including Notes denominated in Sterling) in respect of which the issue proceeds are to be accepted by the issuer in the UK or whose issue otherwise constitutes a contravention of section 19 FSMA and] which have a maturity of less than one year must have a minimum redemption value of £100,000 (or its equivalent in other currencies). Add appropriate provisions to Conditions if included".

[8] *If the specified denomination is expressed to be €50,000 or its equivalent and multiples of a lower principal amount (for example €1,000), insert the additional wording set out in the Guidance Note published by ICMA in October 2006 (or its replacement from time to time) as follows:*

"€50,000 and integral multiples of [€1,000] in excess thereof up to and including [€99,000]. No notes in definitive form will be issued with a denomination above [€99,000]".

[9] *The applicable Calculation Amount (which is used for the calculation of interest and redemption amounts) will be (i) if there is only one Specified Denomination, the Specified Denomination of the relevant Notes or (ii) if there are several Specified Denominations, or the circumstances referred to in Note 8 above apply, the highest common factor of those Specified Denominations (note: there must be a common factor in the case of two or more Specified Denominations). If "Calculation Amount is to be used in the Final Terms, corresponding references to the Calculation Amount for interest, put and call options and redemption amount calculation purposes should be included in the terms and conditions set out in the base prospectus. Note that a Calculation Amount of less than 1,000 units of the relevant currency may result in practical difficulties for paying agents and/or ICSDs who should be consulted if such an amount is proposed.*

[10] *An Interest Commencement Date will not be relevant for certain Notes, for example Zero Coupon Notes.*

[11] *LR 4.2.5 G states that for issues not specifically described in LR 4.2.4 R, the FSA would expect issuers to follow the most appropriate schedules and building blocks in the PD Regulation to determine the minimum information to be included in listing particulars. If the Final Redemption Amount is other than 100 per cent of the nominal value the Notes will be derivative securities for the purposes of the PD Regulation and the requirements of Annex XII to the PD Regulation will apply. This pro forma has been annotated to indicate where the key additional requirements of Annex XII are dealt with.*

[12] *Consider whether the "senior" terminology is appropriate. See the ICMA paper "Description of Debt as Senior and the Negative Pledge Covenant", dated October 12, 2006.*

[13] *If the Conditions set out in the listing particulars do not include a term set out at paragraphs 18 or 22, e.g. Determination Date, Minimum Amount of Interest, Maximum Final Redemption Amount, then the relevant term should be deleted from the form of Final Terms set out in the listing particulars.*

[14] *If the Conditions set out in the listing particulars do not use the term Determination Date in this context, then the relevant term should be used instead or the provision deleted from the form of Final Terms set out in the listing particulars.*

[15] *If setting notice periods which are different to those provided in the Conditions, issuers should consider the practicalities of distribution of information through intermediaries, for example, clearing systems and custodians, as well as any other notice requirements which may apply, for example, as between the issuer and its fiscal agent or any trustee.*

[16] *If the Conditions set out in the listing particulars do not use the term Payment Date in this context, then the relevant term should be used instead, or the provision deleted from the form of Final Terms set out in the listing particulars.*

[17] *The exchange upon notice/at any time options should not be expressed to be applicable if the Specified Denominations of the Notes in paragraph 6 includes language that reflects the circumstances referred to in Note 8 above.*

[18] *Include if the programme allows a choice between new global notes ("NGNs") or classic global notes ("CGNs") or if the Programme specifies NGNs only. If the programme specifies NGNs only, state "Yes".*

[19] *Include if third party information is provided, for example in compliance with Annex XII of the Prospectus Directive Regulation in relation to an index or its components, an underlying security or the issuer of an underlying security.*

[20] *Where a Trustee is involved in a Programme consider whether this paragraph should be moved to Part A – Contractual Terms to reflect the fact that there is a maintenance of listing covenant in the Trust Deed.*

[21] *Include if the programme allows a choice between NGNs or CGNs or if the Programme specifies NGNs only. Note that notes traded on the PSM will not be eligible collateral until the PSM is approved for these purposes by the ECB.*

ICMA PRO FORMA PRICING SUPPLEMENT FOR MEDIUM TERM NOTE PROGRAMMES FOR USE IN CONNECTION WITH ISSUES OF SECURITIES WHICH ARE NOT SUBJECT TO THE PROSPECTUS DIRECTIVE

The attached pro forma pricing supplement is intended to be used in circumstances where the Euro Medium Term Note Programme is not subject to the Prospectus Directive, for example, where the relevant Offering Circular has been prepared for the purpose of admission of Notes to trading on a market which is not a "regulated market" and where Notes are not to be "offered to the public" (in each case within the meaning of the Prospectus Directive) in the EEA.

It replaces the pro forma Pricing Supplement published in June 2003.

Pricing Supplement dated •

[Name of Issuer]
Issue of [Aggregate Nominal Amount of Tranche] [Title of Notes]
[Guaranteed by **[Name of Guarantor]**]
under the ***[insert Programme Amount]*** **[Debt Issuance Programme]**
[Euro Medium Term Note Programme]

This document constitutes the Pricing Supplement relating to the issue of Notes described herein.

Terms used herein shall be deemed to be defined as such for the purposes of the Conditions set forth in the [Information Memorandum/Offering Circular] dated •[1] [and the supplemental [Information Memorandum/Offering Circular] dated •]]. This Pricing Supplement contains the final terms of the Notes and must be read in conjunction with such [Information Memorandum/Offering Circular] [as so supplemented].

The following alternative language applies if the first tranche of an issue which is being increased was issued under a [Information Memorandum/Offering Circular] with an earlier date.

Terms used herein shall be deemed to be defined as such for the purposes of the Conditions (the "Conditions") set forth in the [Information Memorandum/Offering Circular] dated [original date]. This Pricing Supplement contains the final terms of the Notes and must be read in conjunction with the [Information Memorandum/Offering Circular] dated [current date] [and the supplemental [Information Memorandum/Offering Circular dated•], save in respect of the Conditions which are extracted from the [Information Memorandum/Offering Circular] dated [original date] and are attached hereto.]

[Include whichever of the following apply or specify as "Not Applicable" (N/A). Note that the numbering should remain as set out below, even if "Not Applicable" is indicated for individual paragraphs or sub-paragraphs. Italics denote directions for completing the Pricing Supplement.]

1. [(i)] Issuer: [ ]

   [[(ii) Guarantor: [ ]]

2.	[(i)] Series Number:	[ ]
	[(ii) Tranche Number: (If fungible with an existing Series, details of that Series, including the date on which the Notes become fungible).]	[ ]
3.	Specified Currency or Currencies:	[ ]
4.	Aggregate Nominal Amount:	[ ]
	[(i)] Series:	[ ]
	[(ii) Tranche:	[ ]]
5.	[(i)] Issue Price:	[ ] per cent of the Aggregate Nominal Amount [plus accrued interest from [*insert date*] (*in the case of fungible issues only, if applicable*)]
	[(ii) Net proceeds:	[ ] (*Required only for listed issues*)]
6.	(i) Specified Denominations:	[ ][2, 3]
	(ii) Calculation Amount[4]	[ ]
7.	(i) Issue Date:	[ ]
	(ii) Interest Commencement Date	[*Specify*/Issue date/Not Applicable][5]
8.	Maturity Date:	[*specify date or (for Floating Rate Notes) Interest Payment Date falling in or nearest to the relevant month and year*]
9.	Interest Basis:	[• per cent Fixed Rate] [[*specify reference rate*] +/– • per cent Floating Rate] [Zero Coupon] [Index Linked Interest]

		[Other (*specify*)] (further particulars specified below)
10.	Redemption/Payment Basis:	[Redemption at par] [Index Linked Redemption] [Dual Currency] [Partly Paid] [Instalment] [Other (*specify*)]
11.	Change of Interest or Redemption/ Payment Basis:	[*Specify details of any provision for convertibility of Notes into another interest or redemption/ payment basis*]
12.	Put/Call Options:	[Investor Put] [Issuer Call] [(further particulars specified below)]
13.	[(i)] Status of the Notes:	[Senior/[Dated/Perpetual]/ Subordinated] [6]
	[(ii)] Status of the Guarantee:	[Senior/[Dated/Perpetual]/ Subordinated]][6, 7]
14.	Listing:	[[ ] (*specify*)/None]
15.	Method of distribution:	[Syndicated/Non-syndicated]

PROVISIONS RELATING TO INTEREST (IF ANY) PAYABLE

16.	**Fixed Rate Note Provisions**	[Applicable/Not Applicable] *(If not applicable, delete the remaining sub-paragraphs of this paragraph)*
	(i) Rate[(s)] of Interest:	[ ] per cent per annum [payable [annually/semi-annually/quarterly/monthly| in arrear]

(ii)	Interest Payment Date(s):	[ ] in each year [adjusted in accordance with *[specify Business Day Convention and any applicable Business Centre(s) for the definition of "Business Day"]*/not adjusted]
(iii)	Fixed Coupon Amount[(s)]:	[ ] per Calculation Amount
(iv)	Broken Amount(s):	[ ] per Calculation Amount, payable on the Interest Payment Date falling [in/on] [ ]
(v)	Day Count Fraction:	[30/360 / Actual/Actual (ICMA/ISDA) / other]
(vi)	[Determination Dates:	[ ] in each year (*insert regular interest payment dates, ignoring issue date or maturity date in the case of a long or short first or last coupon. N.B. only relevant where Day Count Fraction is Actual/Actual (ICMA))]*
(vii)	Other terms relating to the method of calculating interest for Fixed Rate Notes:	[Not Applicable/*give details*]
17.	**Floating Rate Note Provisions**	[Applicable/Not Applicable] (*If not applicable, delete the remaining sub-paragraphs of this paragraph.*
(i)	Interest Period(s)	[ ]
(ii)	Specified Interest Payment Dates:	[ ]

(iii)	Business Day Convention:	[Floating Rate Convention/ Following Business Day Convention/ Modified Following Business Day Convention/ Preceding Business Day Convention/ other (*give details*)]
(iv)	Business Centre(s):	[ ]
(v)	Manner in which the Rate(s) of Interest is/are to be determined:	[Screen Rate Determination/ISDA Determination/other (*give details)*]
(vi)	Party responsible for calculating the Rate(s) of Interest and Interest Amount(s) (if not the [Agent]):	[ ]
(vii)	Screen Rate Determination:	
	– Reference Rate:	[ ]
	– Interest Determination Date(s):	[ ]
	– Relevant Screen Page:	[ ]
(viii)	ISDA Determination:	
	– Floating Rate Option:	[ ]
	– Designated Maturity:	[ ]
	– Reset Date:	[ ]
(ix)	Margin(s):	[+/-][ ] per cent per annum
(x)	Minimum Rate of Interest:	[ ] per cent per annum
(xi)	Maximum Rate of Interest:	[ ] per cent per annum
(xii)	Day Count Fraction:	[ ]

(xiii)	Fall back provisions, rounding provisions, denominator and any other terms relating to the method of calculating interest on Floating Rate Notes, if different from those set out in the Conditions:	[ ]
18.	**Zero Coupon Note Provisions**	[Applicable/Not Applicable] (*If not applicable, delete the remaining sub-paragraphs of this paragraph*)
(i)	[Amortisation/Accrual] Yield:	[ ] per cent per annum
(ii)	Reference Price:	[ ]
(iii)	Any other formula/basis of determining amount payable:	[ ]
19.	**Index-Linked Interest Note Provisions**	[Applicable/Not Applicable] (*If not applicable, delete the remaining sub-paragraphs of this paragraph*)
(i)	Index/Formula:	[*give or annex details*]
(ii)	Party responsible for calculating the Rate(s) of Interest and/or Interest Amount(s) (if not the [Agent]):	[ ]
(iii)	Provisions for determining Coupon where calculation by reference to Index and/or Formula is impossible or impracticable or otherwise disrupted:	[ ]
(iv)	Interest or calculation period(s):	[ ]

(v)	Specified Interest Payment Dates:	[ ]
(vi)	Business Day Convention:	[Floating Rate Convention/ Following Business Day Convention/Modified Following Business Day Convention/Preceding Business Day Convention/ other (*give details*)]
(vii)	Business Centre(s):	[ ]
(viii)	Minimum Rate of Interest:	[ ] per cent per annum
(ix)	Maximum Rate of Interest:	[ ] per cent per annum
(x)	Day Count Fraction:	[ ]

20. **Dual Currency Note Provisions** [Applicable/Not Applicable] *(If not applicable, delete the remaining sub-paragraphs of this paragraph)*

(i)	Rate of Exchange/method of calculating Rate of Exchange:	[*give details*]
(ii)	Party, if any, responsible for calculating the Rate(s) of Interest and Interest Amount(s) (if not the [Agent]):	[ ]
(iii)	Provisions applicable where calculation by reference to Rate of Exchange impossible or impracticable:	[ ]
(iv)	Person at whose option Specified Currency(ies) is/ are payable:	[ ]

PROVISIONS RELATING TO REDEMPTION

21.	**Call Option**	[Applicable/Not Applicable] *(If not applicable, delete the remaining sub-paragraphs of this paragraph)*
(i)	Optional Redemption Date(s):	[ ]
(ii)	Optional Redemption Amount(s) of each Note and specified denomination method, if any, of calculation of such amount(s):	[ ] per Calculation Amount
(iii)	If redeemable in part:	
	(a) Minimum Redemption Amount:	[ ] per Calculation Amount
	(b) Maximum Redemption Amount:	[ ] per Calculation Amount
(iv)	Notice period[8]	[ ]
22.	**Put Option**	[Applicable/Not Applicable] (*If not applicable, delete the remaining sub-paragraphs of this paragraph*)
(i)	Optional Redemption Date(s):	[ ]
(ii)	Optional Redemption Amount(s) of each Note and method, if any, of calculation of such amount(s):	[ ] per Calculation Amount
(iii)	Notice period[8]	[ ]
23.	**Final Redemption Amount of each Note**	[ ] per Calculation Amount

24. **Early Redemption Amount**

Early Redemption Amount(s) per Calculation Amount payable on redemption for taxation reasons or on event of default and/ or the method of calculating the same (if required or if different from that set out in the Conditions):	[ ]

GENERAL PROVISIONS APPLICABLE TO THE NOTES

25.	Form of Notes:	**Bearer Notes[9]:** [Temporary Global Note exchangeable for a Permanent Global Note which is exchangeable for Definitive Notes in the limited circumstances specified in the Permanent Global Note] [Temporary Global Note exchangeable for Definitive Notes on [ ] days' notice] [Permanent Global Note exchangeable for Definitive Notes in the limited circumstances specified in the Permanent Global Note] [Registered Notes]
26.	New Global Note:[10]	[Yes][No]
27.	Financial Centre(s) or other special provisions relating to Payment Dates:	[Not Applicable/*give details. Note that this item relates to the date and place of payment, and not*

		interest period end dates, to which items 16 (ii), 17(iv) and 19(vii) relate]
28.	Talons for future Coupons or Receipts to be attached to Definitive Notes (and dates on which such Talons mature):	[Yes/No. *If yes, give details*]
29.	Details relating to Partly Paid Notes: amount of each payment comprising the Issue Price and date on which each payment is to be made and consequences (if any) of failure to pay, including any right of the Issuer to forfeit the Notes and interest due on late payment:	[Not Applicable/*give details*]
30.	Details relating to Instalment Notes: amount of each instalment, date on which each payment is to be made:	[Not Applicable/*give details*]
31.	Redenomination, renominalisation and reconventioning provisions:	[Not Applicable/The provisions [in Condition •] [annexed to this Pricing Supplement] apply]
32.	Consolidation provisions:	[Not Applicable/The provisions [in Condition •] [annexed to this Pricing Supplement] apply]
33.	Other terms or special conditions:	[Not Applicable/*give details*]

DISTRIBUTION

34.	(i)	If syndicated, names of Managers:	[Not Applicable/*give names*]
	(ii)	Stabilising Manager (if any):	[Not Applicable/*give name*]
35.		If non-syndicated, name of Dealer:	[Not Applicable/*give name*]

36.	Additional selling restrictions:	[Not Applicable/*give details*]

OPERATIONAL INFORMATION

37.	ISIN Code:	[ ]
38.	Common Code:	[ ]
39.	Any clearing system(s) other than Euroclear Bank S.A./N.V. and Clearstream Banking société anonyme and the relevant identification number(s):	[Not Applicable/*give name(s) and number(s)]*
40.	Delivery:	Delivery [against/free of] payment
41.	Additional Paying Agent(s) (if any):	[ ]
42.	Intended to be held in a manner which would allow Eurosystem eligibility [11]	[Yes] [No] [Note that the designation "yes" simply means that the Notes are intended upon issue to be deposited with one of the ICSDs as common safekeeper and does not necessarily mean that the Notes will be recognised as eligible collateral for Eurosystem monetary policy and intra-day credit operations by the Eurosystem either upon issue or at any or all times during their life. Such recognition will depend upon the ECB being satisfied that Eurosystem eligibility criteria have been met.] [*Include this text if "yes" selected in*

which case the Notes must be issued in NGN form.]

[**PURPOSE OF PRICING SUPPLEMENT**

This Pricing Supplement comprises the final terms required for issue and admission to trading on the [*specify relevant stock exchange/market*][12] of the Notes described herein pursuant to the [*insert Programme Amount*] [Debt Issuance Programme] [Euro Medium Term Note Programme] of •.]

RESPONSIBILITY

The Issuer [and the Guarantor] accept[s] responsibility for the information contained in this Pricing Supplement.

Signed on behalf of [name of the Issuer]:

By: .....
Duly authorised

[Signed on behalf of [name of the Guarantor]:

By: .....

Duly authorised]

Notes

[1] *Leave blank in the pro forma pricing supplement in the offering circular.*

[2] *Section 6: Add the following language if the programme allows for issues of securities with a maturity of less than one year and the issuer is not an authorised person permitted to accept deposits or an exempt person under the UK Financial Services and Markets Act 2000. Delete square-bracketed text for issuers incorporated in the UK or within S 418 FSMA. The issue of securities with a maturity of less than one year by such issuers, where the issue proceeds are to be accepted in the United Kingdom, or, in the case of issuers incorporated in the UK or within*

S 418 FSMA, will be subject to S 19 FSMA unless their denomination is £100,000 or more (or its equivalent in other currencies) and they are only issued to "professionals" within Article 9(2)(a) of the Financial Services and Markets Act (Regulated Activities) Order 2001:

Notes [(including Notes denominated in Sterling) in respect of which the issue proceeds are to be accepted by the issuer in the United Kingdom or whose issue otherwise constitutes a contravention of S 19 FSMA and] which have a maturity of less than one year must have a minimum redemption value of £100,000 (or its equivalent in other currencies).

Add appropriate provisions to terms and conditions if included.

[3] *If the specified denomination is expressed to be €50,000 or its equivalent and multiples of a lower principal amount (for example €1,000), insert the additional wording set out in the Guidance Note published by ICMA in November 2006 (or its replacement from time to time) as .follows:*

"€50,000 and integral multiples of [€1,000] in excess thereof up to and including [€99,000]. No notes in definitive form will be issued with a denomination above [€99,000]".

[4] *The applicable Calculation Amount will be (i) if there is only one Specified Denomination, the Specified Denomination of the relevant Notes or (ii) if there are several Specified Denominationor the circumstances referred to in Note 3 above apply, the highest common factor of those Specified Denominations (note: there must be a common factor in the case of two or more Specified Denominations). If "Calculation Amount" is to be used in the Final Terms, corresponding references to the Calculation Amount for interest, put and call options and redemption amount calculation purposes should be included in the terms and conditions set out in the base prospectus. Note that a Calculation Amount of less than 1,000 units of the relevant currency may result in practical difficulties for paying agents and/or ICSDs who should be consulted if such an amount is proposed.*

[5] *An Interest Commencement Date will not be relevant for certain Notes, for example Zero Coupon Notes.*

[6] *Consider whether the "senior" terminology is appropriate. See the ICMA paper "Description of Debt as Senior and the Negative Pledge Covenamt", dated October 12, 2006.*

[7] *Add the following language if Board (or similar) authorisation is required for the particular tranche of notes or related guarantee*

Date [Board] approval for issuance of Notes [and Guarantee] obtained: [ ] [and [ ], respectively]

[8] *If setting notice periods which are different to those provided in the terms and conditions, issuers are advised to consider the practicalities of distribution of information through intermediaries, for example, clearing systems and custodians, as well as any other notice requirements which may apply, for example, as between the issuer and its fiscal agent or any trustee.*

[9] *The exchange upon notice/at any time options should not be expressed to be applicable if the Specified Denomination of the Notes in paragraph 6 includes the formulation referred to in Note 3 above.*

[10] *Include if the programme allows a choice between new global notes ("NGNs") or classic global notes ("CGNs") or if the Programme specifies NGNs only. If the programme specifies NGNs only, state "Yes".*

[11] *Include if the programme allows a choice between NGNs or CGNs or if the Programme specifies NGNs only.*

[12] *Include the name of the relevant exchange and/or market, for example the Euro MTF market of the Luxembourg Stock Exchange, which is not a regulated market (as defined in the Prospectus Directive) within the EEA. If the notes are to be admitted to trading on such a regulatedmarket, consider one of the alternative Pro Forma Final Terms contained in the ICMA Primary Market Handbook.*

SECTION SEVEN
ICMA STANDARD DOCUMENTATION AND STANDARD LANGUAGE

III

ICMA Compliant Language for Actual/Actual interest calculations in euro-denominated fixed rate bond issues

Note:
ICMA was formed from the merger of IPMA and ISMA on 1 July 2005. Prior to 1 July 2005 this language was referred to as ISMA actual/actual

ICMA COMPLIANT LANGUAGE FOR ACTUAL/ACTUAL INTEREST CALCULATIONS IN EURO-DENOMINATED FIXED RATE BOND ISSUES

VERSION 1 (No long/short coupons)

Where interest is to be calculated in respect of a period which is equal to or shorter[1] than an Interest Period the *[insert definition used for day-count fraction]* used will be the number of days in the relevant period, from and including the date from which interest begins to accrue to but excluding the date on which it falls due, divided by [the product of (1)][2] the number of days in the Interest Period in which the relevant period falls (including the first such day but excluding the last) [and (2) the number of Interest Periods normally ending in any year][2].

VERSION 2 (Long or short coupons)

The *[insert definition used for day-count fraction]* will be calculated on the following basis:

(i) if the Accrual Period is equal to or shorter than the Determination Period during which it falls, the *[insert definition used for day-count fraction]* will be the number of days in the Accrual Period divided by [the product of (1)][2] the number of days in such Determination Period [and (2) the number of Determination Periods normally ending in any year][2]; and

(ii) if the Accrual Period is longer than one Determination Period[3], the *[insert definition used for day-count fraction]* will be the sum of:

(A) the number of days in such Accrual Period falling in the Determination Period in which it begins divided by [the product of (1)][2] the number of days in such Determination Period [and (2) the number of Determination Periods normally ending in any year][2]; and

(B) the number of days in such Accrual Period falling in the next Determination Period divided by [the product of (1)][2] the number of days in such Determination Period [and (2) the number of Determination Periods normally ending in any year][2],

where:

"Accrual Period" means the relevant period for which interest is to be calculated (from and including the first such day to but excluding the last); and

"Determination Period" means the period from and including *[insert day(s) and month(s) on which interest is normally paid (if more than one, then insert such dates in the alternative)]* in any year to but excluding the next *[insert day(s) and month(s) on which interest is normally paid (if more than one, then insert such dates in the alternative)]*.

Notes

[1] *For example, if a call or a put option is exercised otherwise than on a normal date for payment of interest.*

[2] *The wording in brackets can be deleted where the Interest Period is one year.*

[3] *The language refers to our Accrual Period which is no more than two Determination Periods. The wording can be similarly extended to accommodate longer periods.*

SECTION SEVEN
ICMA STANDARD DOCUMENTATION AND STANDARD LANGUAGE

IV

ICMA Standard Language for the EU Directive on the Taxation of Savings

ICMA STANDARD LANGUAGE FOR THE EU DIRECTIVE ON THE TAXATION OF SAVINGS

On 19 July 2004, the European Commission announced that the EU's Council of Ministers had adopted a decision establishing an application date for the Savings Tax Directive of 1 July 2005.

As the application date has now passed, ICMA is making changes of a purely technical nature to the ICMA standard language.

ICMA is also withdrawing the ICMA standard EU tax disclosure language because market participants and their advisers have developed their own disclosure formats. ICMA standard disclosure is therefore no longer necessary.

The amended standard language appears in Annex A.

Note:

Given the time elapsed since the ECOFIN Council meeting referred to above, it seems unlikely that another Directive will be implemented as a consequence of the meeting and so the related references on pages 2 and 9 may be seen as out of date. However, as the reference remains technically accurate and in order to promote standardisation and not unsettle the markets with the introduction of different forms of language, ICMA is not currently amending the existing ICMA standard language.

(September 2010)

Annex A

I. EXCEPTIONS TO GROSS-UP

[The gross up language will not apply in respect of any Note or Coupon…]:

> **"(–)** where [such withholding or deduction] is imposed on a payment to an individual and is required to be made pursuant to European Council Directive 2003/48/EC or any other Directive implementing the conclusions of the ECOFIN Council meeting of 26–27 November 2000 on the taxation of savings income or any law implementing or complying with, or introduced in order to conform to, such Directive; or
>
> **(–)** presented for payment by or on behalf of a [holder] who would have been able to avoid such withholding or deduction by presenting the relevant [Note/Coupon] to another [Paying Agent] in a Member State of the EU."

II. ADDITIONAL UNDERTAKING FROM ISSUER

> "The [issuer] undertakes that, it will ensure that it maintains a paying agent in an EU Member State that will not be obliged to withhold or deduct tax pursuant to any law implementing the Savings Directive (2003/48/EC) or any other Directive implementing the conclusions of the ECOFIN Council meeting of 26–27 November 2000."

This is the text of a memorandum issued by IPMA in February 2001, which is retained in the ICMA Primary Market Handbook by way of background. The standard form language referred to below and in Paragraph 4 has since been updated and is therefore no longer attached to the memorandum (December 2005). The current standard form language appears in Annex A.

NEW TAX GROSS UP CLAUSE FOR THE EU DIRECTIVE ON THE TAXATION OF SAVINGS PROPOSED AT THE NICE ECOFIN COUNCIL ON 26–27 NOVEMBER 2000

The International Primary Market Association is making available to issuers, lead managers, arrangers and their legal and tax advisers withholding tax clause language for inclusion in the terms and conditions of bond issues (Annex 1), and suggested disclosure language for inclusion in disclosure documents (Annex 2). The suggested language is intended to allow issues to continue with minimum disturbance after the proposed European Union Directive on the taxation of savings comes into effect, taking into account the 1 March 2001 grandfathering date in the Directive.

The information exchange provisions in the Directive are also grandfathered up to this date.

1. BACKGROUND

The Directive was the subject of consultation for three years and certain aspects of it are still under active debate. No draft of the Directive is currently available. The former draft dated May 1998 will be withdrawn and replaced shortly, but no firm date is fixed for a redraft.

The analysis below is based on the EU Presidency paper entitled "Conclusions of the ECOFIN Council on 26–27 November 2000 on the tax package" dated 27 November 2000.

Even when the Directive has been formally approved, it will have to be implemented by way of national legislation.

Accordingly, IPMA can only highlight a number of areas raised by the Directive that issuers, lead managers and arrangers should bear in mind when arranging a new issue of bonds. They should continue to take their own legal advice, as the position may change radically at any time.

2. OUTLINE OF PROPOSALS

The Directive will:

- Apply when a person located in one Member State makes a payment to an individual resident in another Member State
- Of income on a debt claim, including Eurobonds
- Where that individual is an EU resident
- From 2003 subject to various conditions

Where the Directive applies, the person making the payment will collect information from the individual receiving payment and transmit that information to the individual's tax authority. As an interim measure, for a period of seven years from the introduction of the Directive, Austria, Belgium and Luxembourg will impose a withholding tax in place of information reporting. These countries will transmit to the tax authorities of the country of residence of the individual suffering the withholding 75% of any tax withheld under "revenue sharing" arrangements.

There are proposals for "grandfathering" existing issues, under which neither the information collection or withholding tax provisions of the Directive will apply if:

- The issue date of the bonds is prior to 1 March 2001, or
- The prospectus for the issue is certified by the competent authority prior to 1 March 2001.

3. GROSS UP AND TAX CALL

Most Eurobonds contain a provision requiring the issuer to gross up payments if a withholding or deduction has to be made under the laws of the issuer's country of incorporation (or that of the guarantor, if there is one) for tax on payments by or on behalf of the issuer.

To protect the issuer against the additional cost of such gross up provisions, most Eurobonds also permit the issuer to call the whole issue at par if the issuer is (or would be on the next payment date) required to gross up.

The Directive poses a problem for both issuer and investor. The issuer will be faced with the possibility that its issue will have to be grossed up, giving it the choice of refinancing the issue by exercising the tax call, or bearing the additional cost of grossing up. The investor will be faced with the prospect of having the bond redeemed early and (depending on market conditions) losing an investment carrying a favourable interest rate.

4. NEW TAX LANGUAGE

For issues that settle after 28 February 2001 and therefore are not grandfathered, we attach language for two additional exceptions (see Annex 1). Both this language and Annex 2 have been prepared in co-operation with a group of leading law firms active in the international capital markets and have been the subject of wide consultation with other law firms and practitioners in Europe.

The language has been approved by all relevant IPMA Committees.

It may be referred to as "IPMA Standard EU Exception" for inclusion in usual tax gross up clauses.

The first exception removes the gross up obligation from any payment to an individual where the withholding results from the proposed Directive. The second exception deprives a holder of the bond of the benefit of the gross up if the payment would not have attracted withholding if presented to another paying agent in the EU.

On the current basis of the Directive, bonds including this language would not be subject to grossing up for tax and consequent early redemption as a result of the Directive.

5. AVOIDANCE OF GROSS UP

There will be no gross up and hence no call if:

- The bonds are issued under the grandfathering arrangements referred to above, or
- The bond contains the additional exceptions set out in Annex 1 to the gross up provision.

6. NON-EU ISSUERS

The Directive will only affect payments to individuals who are residents of a Community State. As the gross up provision in Eurobonds is almost invariably limited to taxes imposed by the issuer's (or guarantor's) jurisdiction, it is unlikely that the Directive will ever trigger a gross up on Eurobonds issued by non-EU issuers.

However, in the absence of the text of the Directive and its implementing legislation, it will be safer to include the additional exceptions from the gross up provision in such issues. The proposals contemplate non-EU countries and dependent and associated territories implementing "comparable" withholding or information reporting arrangements; it is possible that these may include arrangements for sharing of revenue from withholding. Any such revenue sharing could result in any withheld tax being treated as tax of the issuer's country, thus triggering the gross up.

There is also considerable benefit in a standard form of tax clause applicable to the entire international debt market.

7. MEDIUM TERM NOTES

The grandfathering proposals include an exemption for issues made on or after 1 March 2001, where the prospectus for the issue was certified by the

competent authority before 1 March 2001. It is not entirely clear how this is intended to operate in the context of Medium Term Note programmes. In the absence of any clarity, it is unsafe to assume that the language is intended to permit drawdowns after 1 March 2001 to be grandfathered, even if the base prospectus was dated before that date.

There are two alternative ways of including the additional exceptions in the gross up provision in the terms and conditions of the notes – by updating the programme (i.e., the base prospectus); and by inserting the additional exceptions into the pricing supplement for each drawdown on or after 1 March 2001. It will normally be impractical to carry out an emergency update of current programmes, but the necessary amendments should be made at the next update of the programme. In the meantime, care must be taken to ensure that the necessary amendments to the gross up provisions are included in the pricing supplement for each drawdown.

A number of programmes include a guarantee that is given to cover all issues under the programme from time to time (rather than requiring a specific guarantee to be executed for each drawdown). Such guarantees may require amendment for drawdowns occurring on or after 1 March 2001, even though no other update of the programme is contemplated.

8. FUNGIBLE ISSUES

The decision to grandfather issues settled before 1 March 2001 inevitably will make it very difficult to issue add on tranches which are fungible with existing issues. The problem arises in two main areas.

First, a condition of fungibility is that the terms and conditions of the old and new tranches are identical in every respect. Therefore, if the new bonds contain the additional exceptions set out in Annex 1, they will not be fungible with the old bonds.

Second, any mixing of grandfathered and non-grandfathered issues will potentially jeopardise the position of any individual holding a direct or indirect interest in the grandfathered bond, who may lose the ability to receive payment gross as a result of the fungible issue.

Bond issues which do not add the additional exceptions to new bonds or where old and new bonds do not contain tax gross up provisions will have identical terms and conditions in the old and new issues but the tax treatment under the Directive of the old and new bonds will be different.

If the bonds are considered to be fungible, it will be impossible to distinguish between the pre-1 March bonds and the new bonds. Therefore, all the bonds may be subject to withholding or information reporting. Issuers will want to consider carefully whether they are prepared to jeopardise the position of holders of the grandfathered bonds.

In addition, the new issue will be at risk from future changes in the Directive and in any implementing legislation.

IPMA has concluded, after careful review, that the risk of confusion and mistakes among investors, traders, paying agents, collecting agents, clearing and settlement organisations and custodians, if issuers attempt to make new issues fungible with grandfathered issues, outweighs the potential benefits of fungibility.

At the date of this Guidance Note, the criteria for effective fungibility are not clear. The terms and conditions of securities intended to be fungible will have to be identical to each other, and another essential factor will be the allocation of the same ISIN or other securities identity number as that of the relevant outstanding securities. It will be important to check with the relevant clearing systems and ISIN number generator before issue.

Clearstream Bank and Euroclear Bank are currently considering what will be their policy in this area.

These questions are unlikely to be resolved before 1 March 2001.

Certain EU Member States are concerned about the effect of grandfathering on their own, outstanding central government securities, as loss of fungibility will mean that they will not be able to reopen their issues. This may pose problems for strips, liquidity facilities and reaching the Euro MTS thresholds. Developments in this area may mean that the provisions of the Directive change and in any case are likely to delay the production of a publicly available draft of the Directive.

IPMA expects to publish additional guidance on fungibility as soon as the situation becomes clear.

9. ADDITIONAL UNDERTAKING FROM ISSUERS

The second additional exception referred to in 4. above excludes payments where the withholding or deduction would have been avoided if presentation had been made to another EU paying agent. In order to give full effect to this exception, consideration should be given to including in the documentation for the issue a provision which would require the issuer to maintain an EU paying agent in a country that will not implement a withholding regime under the proposed Directive, along the following lines:

> *The [issuer] undertakes that, if the conclusions of the ECOFIN Council meeting of 26–27 November 2000 are implemented, it will ensure that it maintains a paying agent in an EU Member State that will not be obliged to withhold or deduct tax pursuant to the Directive*

This, or other appropriate wording, could be included in the underwriting agreement, if the managers wish to be party to the arrangements, and in the terms and conditions, fiscal agency agreement or trust deed.

15 February 2001

SECTION SEVEN
ICMA STANDARD DOCUMENTATION AND STANDARD LANGUAGE

V

Notice No. 2 on Contracts (Rights of Third Parties) Act 1999

NOTICE NO. 2 DATED 18 OCTOBER, 2000 ON THE CONTRACTS (RIGHTS OF THIRD PARTIES) ACT 1999

THIS NOTICE SUPERSEDES THE NOTICE PREVIOUSLY CIRCULATED ON 11 MAY 2000

BACKGROUND

This Notice is relevant to any contract which is governed by English law in the context of an international offering of securities. The Contracts (Rights of Third Parties) Act 1999 (the "Act") of the United Kingdom was enacted on 11 November 1999 and provides that persons who are not parties to a contract may be given enforceable rights under the contract. During the period from 11 November 1999 to 10 May 2000, such rights could only be created expressly. In other words, for the Act to apply the contract must say in terms that it applies. After 10 May 2000, the Act continues to apply where it is expressed to do so and, in addition, it applies where a term of the contract purports to confer a benefit on a third party (that is, where there is no express application of the Act in the contract) – unless the intention of the parties is otherwise.

Consistency and clarity are important in the international securities. The purpose of this Notice is to set out guidelines to assist market participants in achieving this.

GENERAL APPROACH

The general approach adopted in English law contracts relating to international offerings of securities should be to disapply the Act. Each contract should contain wording to the following effect:

> *A person who is not a party to this Agreement has no right under the Contracts (Rights of Third Parties) Act 1999 to enforce any term of this Agreement [but this does not affect any right or remedy of a third party which exists or is available apart from that Act].*

The phrase in square brackets is optional – it simply reflects the existing legal position under the Act.

As securities are not really "agreements" with "parties", the wording to be included in the terms and conditions of the securities to disapply the Act should be as follows:

> *No person shall have any right to enforce any term or condition of this [security] under the Contracts (Rights of Third Parties) Act 1999.*

This wording should be contained in the terms and conditions of securities and, in the case of an issue under a Programme, either in the terms and conditions for the Programme or in the Pricing Supplement.

Where it is desired to apply the Act to a specific provision in a contract, wording should be included in that provision, to the following effect:

> *The Contracts (Rights of Third Parties) Act 1999 applies to this Clause ( ).*

Care (and appropriate advice) should be taken when applying the Act to specific provisions, particularly where the parties to the contract wish to control the way in which the rights granted can be exercised; and where they wish to be able to amend or vary the terms of the contract without the consent of the third party. If the contract contains restrictions on assignment of rights, consideration should also be given to extending these to the rights created under the Act.

Where the Act is to apply only to certain provisions in a contract, the language above disapplying the Act should be adapted as follows:

> *A person who is not a party to this Agreement has no right under the Contracts (Rights of Third parties) Act 1999 to enforce any term of this Agreement, except and to the extent (if any) that this Agreement expressly provides for such Act to apply to any of its terms.*

This will require a conscious act by the draftsman and thus avoid rights being created inadvertently.

SPECIFIC CASES WHERE THE ACT MAY BE RELEVANT

1. INDEMNITY

Under section 15 of the Securities Act of 1933 and section 20 of the Securities Exchange Act of 1934 of the United States of America, persons who control the underwriters of a securities issue and others may be liable in relation to misleading prospectuses. Individual employees and officers may also be liable. It is usual to obtain an indemnity from the issuer of such securities against such liabilities. The indemnity also covers affiliates of the managers as they are typically involved in distributing securities. The indemnity is usually contained in the Subscription Agreement (or the Dealer Agreement in a Programme).

Such "controlling persons", employees, officers and affiliates are not parties to the Subscription Agreement or the Dealer Agreement and under English law have not been, prior to the Act, able to enforce the indemnity directly themselves. Instead, they have to rely on the manager (who is a party) to enforce on their behalf.

It is not normally desirable to apply the Act to this indemnity because it will make any litigation arising out of a misleading prospectus more difficult for the manager of the issue to control.

When the Act is disapplied as contemplated above, it is desirable to recast this indemnity in order to give the manager control over any litigation and to seek to ensure the recoverability of third party losses. Wording to the following effect should be used:

> *The issuer undertakes to [each Manager/the Arranger and each Dealer] that if that [Manager/Arranger or Dealer] or [insert list of indemnified third parties] (each a 'Relevant Party') incurs any liability, damages, cost, loss or expense (including, without limitation, legal fees, costs and expenses) (a Loss") arising out of, in connection with or based on [insert list of indemnified circumstances], the Issuer shall pay to that [Manager/Arranger or Dealer] on demand an amount equal to such Loss.*

No [Manager/Arranger or Dealer] shall have any duty or obligation, whether as fiduciary for any Relevant Party or otherwise, to recover any such payment or to account to any other person for any amounts paid to it under this Clause.

2. RULE 144A INFORMATION COVENANT

One of the conditions which has to be satisfied for the safe harbour under Rule 144A under the Securities Act of 1933 of the United States of America to be available is that the issuer must agree to supply certain information to purchasers of the securities from time to time.

This agreement is currently contained, in typical English law documentation, in a deed (which puts it outside the English law rules limiting enforcement to contractual parties only). This will either be the Trust Deed for the issue or (if there is none) will usually be a deed poll. There is felt to be no real disadvantage to the current arrangements for dealing with this issue and it is not always easy to identify a contract into which the agreement can conveniently be put. It could be included in the Subscription Agreement (or the Dealer Agreement in a Programme) and made subject to the Act. However some participants in the market believe that such Agreements should be limited to matters of concern between the issuer and the managers, and should not contain extraneous matters of this sort. For those who share this view, it is suggested that the current procedures should continue to be used rather than the Act.

The exception to this principle is in relation to issues of global depositary receipts, where the covenant can conveniently be included in the Deposit Agreement.

3. DIRECT ENFORCEMENT RIGHTS

Where issues are in global form and are held through Euroclear or Clearstream (and possibly other clearing systems), the clearing systems will not normally enforce the terms of the securities against an issuer or guarantor on behalf of persons investing in such securities through accounts held with the Clearing Systems – (see ICMA Recommendation 1.16). Accordingly, such participants must be given direct enforcement rights against the issuer and guarantor in the case of default. Such rights

are typically contained, in an issue governed by English law, either in the Trust Deed for the issue or, if there is none, in a deed poll. It would be possible to use the Act, instead of a deed poll, to create such direct enforcement rights. However, this would be inadvisable, without further discussion with the relevant clearing systems, as the deed poll contains a number of provisions dealing with timing and other mechanical issues.

4. KEEP-WELL AGREEMENTS

The Act may be used in connection with keep-well agreements governed by English law, where these are intended to be legally enforceable by parties to a securities transaction.

5. TRUST DEEDS

Trust Deeds typically contain an indemnity to the Trustee and anyone employed by it against losses incurred in carrying out duties under the Trust Deed. This indemnity is currently expressed in favour of the Trustee, but may be expressed in favour of the Trustee and its employees, and made subject to the Act. In any such case, the Trustee should be consulted at an early stage as to whether the Act should be used in this way or whether the Trustee would prefer to adopt an approach similar to that described in 1 above.

6. SECURITISATIONS

The Act may be useful to simplify securitisation documentation. For example, it would be possible to use the Act to confer benefits under contracts on a Security Trustee, rather than making the Security Trustee a party to the contract. Equally, where covenants are currently passed from party to party in a succession of contracts, the documentation can be simplified by using the Act so that the benefit of the covenant is given directly to the intended recipient without involving a chain of intervening contracts. However, care must be taken in using the Act to create third party rights where the giver of the rights is intended to be a bankruptcy-remote vehicle, because the Act contains no provisions to enable bankruptcy-remote provisions (such as an agreement not to petition for winding up) to be imposed on third parties.

SECTION SEVEN
ICMA STANDARD DOCUMENTATION AND STANDARD LANGUAGE

VI

Standard Form Arrangement and Comfort Letters for Stand-Alone Bonds

STANDARD FORM ARRANGEMENT

AND COMFORT LETTERS

Following extensive dialogue and debate between IPMA and the UK accounting firms – Deloitte & Touche, Ernst & Young, KPMG and Pricewaterhouse Coopers – together the "Major UK Firms", standard forms of Arrangement Letter and Comfort Letter have been developed and are attached to this Notice.

It is envisaged that the Major UK firms will use these standard form documents in connection with the issuance by their clients in the international market of investment grade "straight debt" securities that are straightforward. For this purpose "straight debt" does not include subordinated bonds, bonds to the extent that they are to be sold in the US, bonds that are part of a securitisation financing, or bonds that contain a derivative element or are index or credit linked; and "investment grade" means securities where the issuer or guarantor is rated A or higher by Standard & Poor's or Moodys in respect of the type of security being issued.

In relation to debt securities and issuers other than those included in paragraph 2 above, the arrangements will be subject to agreement between the relevant parties in the context of those transactions (and, while they may decide to adopt the letters attached hereto, it is envisaged that such arrangements may involve procedures and comfort that are different from those contained in the attached letters).

The attached version covers stand alone bond issues. IPMA and the major UK firms intend to develop standard form documentation to cover the establishment and update of Medium Term Note Programmes for investment grade issuers which will be published as soon as possible.

The Major UK Firms have indicated that they will use their reasonable efforts to persuade their international network of national practices to use the standard forms of Arrangement Letter and Comfort Letter outside the United Kingdom and the U.S. for such debt securities offerings in the international market, recognising that the parties will need to have regard to local laws and professional requirements and to market practice applicable in the relevant jurisdictions.

The Major UK Firms have agreed to advise their members and networks respectively of the nature and scope of the understandings set out in this notice.

The first point of contact at the Major UK Firms for any queries concerning the utilisation of the standard form letters should be the client engagement partner. In the event that a client engagement partner is uncertain about the application of standard form letters each of the firms has identified the following people as points of reference within their London offices to assist in this respect:

Deloitte & Touche	–	Michael Fisk/Lionel Young
Ernst & Young	–	Steve Hextall/Steve Parkinson
KPMG	–	Peter Hughes/David Cattermole
Pricewaterhouse Coopers	–	Bill Morgan/Hitesh Shah

Each of the above has confirmed their agreement on behalf of their respective UK firms to its contents.

IPMA is pleased to have worked with its members and the accounting firms in developing these standard form documents. As with any standard form, however, when using them, issuers and lead managers should take care to consider the suitability of their use, content and governing law provisions in the circumstances of each specific issue of securities.

IPMA welcomes feedback on the operation of the standard form Arrangement and Comfort Letters which should be sent to hstyle@ipma.org.uk.

ARRANGEMENT LETTER FOR STAND-ALONE BONDS

The Directors
Eurobond Issuer
The Lead Manager and the other Managers (as defined in Paragraph 2 below)
[Date]

Dear Sirs,

[PROPOSED] EUROBOND ISSUE BY EUROBOND ISSUER[1] ("the Issuer")

Introduction

1. This arrangement letter sets out the scope and limitations of the work to be performed by us in connection with the above transaction, namely the proposed issue of [ ] ("the Issue") which will involve the preparation by the Issuer, and for which the Issuer will be solely responsible, of an Offering Circular [in accordance with the Listing Rules of the [relevant] Stock Exchange[2] or other listing authority]. This letter is written in the context of the respective roles of the directors of the Issuer, the Lead Manager ("the Lead Manager"), the other Managers (as defined in Paragraph 2 below) and ourselves.

Addressees

2. This arrangement letter is addressed to the directors of Eurobond Issuer, to the Lead Manager and to each of the managers who have agreed or, prior to the issue of our comfort letter, will agree to participate in the proposed Issue and who have or, prior to the issue of our comfort letter, will have validly authorised the Lead Manager to sign this arrangement letter on their behalf. Their legal names are set out in Appendix 1 to this arrangement letter and, together with the Lead Manager, are referred to in this arrangement letter as "the Managers".

3. By signing and accepting the terms of this arrangement letter, the Lead Manager confirms that it will ensure that it receives prima

facie authority from each Manager identified in Appendix 1 authorising it to enter into this arrangement letter on the relevant Manager's behalf. However, the Lead Manager makes no representation as to whether such prima facie authority actually confers the necessary authority.

4. Up to the date of the relevant comfort letter, a Manager may be added to Appendix 1 by the Issuer or by the Lead Manager by written notice to us and the Issuer or the Lead Manager. A Manager may also be deleted from Appendix 1 where the Manager withdraws from the Issue and/or advises the Lead Manager that it does not wish to receive the benefit of the comfort letter or for this arrangement letter to be signed on its behalf or where the Lead Manager does not receive authority to sign this arrangement letter on behalf of the relevant Manager. The revised managers shall then, together with the Lead Manager, be referred to in this arrangement letter as "the Managers".

Comfort Letter

5. The Lead Manager confirms that, in connection with the proposed Issue, it is aware of guidance relating to due diligence issued by the International Capital Market Association from time to time, which will be followed by it in connection with the proposed issue.

6. Our comfort letter will be provided to the addressees of this letter solely in the context of the due diligence procedures that you undertake, or procure to be undertaken, pursuant to the guidance referred to in Paragraph 5 above in connection with the contents of the Offering Circular for the purpose of any defence in such context that you may wish to advance in any claim or proceeding in connection with the contents of the Offering Circular. Accordingly our comfort letter will be addressed to you for that purpose and may not be relied on by you for any other purpose.

7. For the avoidance of doubt and subject to the limitations or exclusions which are contained in or referred to in Paragraphs 8, 9, 27, 32 and 33 of this letter, nothing in this letter shall preclude the Managers from obtaining compensation from us in respect of any liability that the Managers incur to an investor arising out of the contents of the Offering Circular to the extent that such liability

arises because the work undertaken pursuant to this arrangement letter or the comfort letter was undertaken negligently.

8. Any comfort letter issued pursuant to this arrangement letter will not have been provided in accordance with the professional standards of the US American Institute of Certified Public Accountants and accordingly should not be relied upon in connection with any obligations or responsibilities that you may have under any legislation, regulations and/or rule of law in the United States and, in the event of any such use in the United States, we accept no responsibility in this regard.

9. Our work and findings shall not in any way constitute advice or recommendations (and we accept no liability in relation to any advice or recommendations) regarding any commercial decisions associated with the Issue, including, in particular, but without limitation, any which may be taken by the Managers (or any person connected to the Managers or any one of them) in the capacity of investor or in providing investment advice to their clients.

10. Our comfort letter will be provided solely for your private information and should not be used for any purpose other than as set out in Paragraph 6. Our comfort letter may not be referred to in any other document (except that reference may be made to its existence in any contract or other communication between the Issuer and/or the Managers, and/or ourselves), nor made available to any other party (except that a copy may be included in the bible of transaction documents memorialising the Issue prepared for the Issuer and the Managers).

11. Nothing in Paragraphs 8 and 10 shall prevent you from disclosing our comfort letter to your professional advisers or as may be required by law or regulation, and/or referring to and/or producing our comfort letter in court proceedings relating to the Issue or the Offering Circular. Provided that you first obtain our prior written consent, you may disclose our comfort letter to third parties where to do so would reasonably be necessary in the interest of a resolution of a dispute with that third party.

12. Other than to those who have validly accepted this arrangement letter, we will not accept any responsibility to any party to whom our comfort letter is shown or into whose hands it may come.

13. You may only rely on information and comments set out in our comfort letter on the basis of this arrangement letter.

Work and Procedures

14. Our work will, where appropriate, be conducted in accordance with [*any applicable professional guidance or, if none, the Investment Circular Reporting Standards issued by the Auditing Practices Board of the United Kingdom*]. In other jurisdictions, standards and practice relevant to reporting accountants may be different and may not provide for reporting in the manner contemplated herein. Accordingly our report should not be relied on as if it had been provided in accordance with the standards and practice of any professional body in any other jurisdiction.

15. We have not carried out an audit examination in accordance with any generally accepted auditing standards of any financial information relating to the Issuer for any period subsequent to [*date of last audited balance sheet*]. The procedures we will use to perform the work set out in this arrangement letter will not constitute an audit or review made in accordance with any generally accepted auditing standards. Furthermore, they will not necessarily reveal matters of significance with respect to any material misstatement of the information referred to below.

16. The procedures that we plan to conduct have been discussed between and agreed by the Issuer, the Lead Manager and us and will be recorded in the comfort letter itself. If during the course of carrying out such procedures as are planned and agreed upon under this letter, and solely as a result of information provided to us in so doing, we conclude that there has been any withholding, concealment or misrepresentation in relation to such information, (or otherwise we conclude that such information contains an inconsistency which clearly indicates that there may have been such a withholding, concealment or misrepresentation), we will discuss with you whether further procedures can be designed to seek to resolve the matter. Where such procedures are agreed between us, we will carry them out and amend the comfort letter accordingly.

17. We will only carry out those verification[3] procedures expressly provided for in the comfort letter. Accordingly, we make no

representations as to the sufficiency for your purposes of such procedures and, therefore, our responsibility shall be limited to performing the work agreed upon in this arrangement letter and/or recorded in the comfort letter with due skill, care and attention. If we were to perform additional procedures or if we were to conduct an audit or review of the financial statements of the Issuer in accordance with auditing standards generally accepted in *[the relevant country]*, other matters might come to our attention which we would report to you. The procedures to be performed by us should not be taken to supplant any additional enquiries or procedures that may be appropriate in the performance of your role under the proposed offering.

18. In relation to the contents of the Offering Circular, we will address ourselves solely to such financial information in the Offering Circular as is identified in the comfort letter[4] and we will make no representations as to the adequacy of disclosure in the Offering Circular or as to whether any material facts have been omitted by the Issuer.

19. Any opinions expressed on financial information outside the context of this arrangement letter were or are expressed solely in the context of the specific terms and conditions governing their preparation. In particular, the terms of this arrangement letter and any action pursuant to it shall be additional to and shall not detract from or change in any way any legal rights which any party to this letter may otherwise have acquired, whether in contract or in tort, in connection with our audits of the financial statements of the Issuer.

20. Save as may be expressly recorded in the comfort letter, we do not accept any responsibility for any other reports or letters beyond any responsibility that we owed to those to whom our reports or letters were addressed at the date of their issue.

Contents of the Comfort Letter

21. We will prepare and expect to issue a comfort letter addressed to the Issuer and the Managers in connection with their due diligence enquiries in connection with the contents of the Offering Circular on the basis described above. [Based upon our present understanding of your requirements we expect to be able

to provide you with a comfort letter substantially in the form contained in Appendix 3, setting out the procedures that we expect to carry out prior to issuing our comfort letter.][5] Your acceptance of our comfort letter in final form constitutes your agreement to the scope and extent of such procedures.

[22. We would be grateful if you would review the draft comfort letter that we expect to be able to provide you with and let us have any amendments you propose to the procedures as soon as possible, so that we can provide you with a revised draft for your further consideration and approval.][5]

[23. Once an advanced draft of the Offering Circular is available and you have identified, and we have agreed, the detailed financial information whose extraction or calculation you require to be covered in the comfort letter, we will provide you with a further revised draft of the comfort letter for your approval of its scope prior to finalisation.][5]

24. For the avoidance of doubt, we will not comment on, or otherwise give comfort in relation to, the prospects or trading position or, save as expressly stated in the comfort letter, comment on or provide any opinion or other conclusion as to the current overall financial position of the Issuer.[6]

Drafts

25. During the course of the arrangement we may show drafts of, or report orally on, our comfort letter to you. In so far as any such draft or oral report is inconsistent with the subsequent final comfort letter, it will be deemed to be superseded by such final comfort letter.

Audit Opinion

26. The Issuer may not include our audit opinion in the Offering Circular without our prior written approval[7] [8].

Meetings

27. It [will be] [has been] necessary for us to receive copies of the draft Offering Circular as it [is] [was] produced and it [may be]

[has been] necessary for us to attend meetings (including, but not limited to, meetings with the Issuer, and its directors and/or employees, and the Lead Manager and its employees or agents) at which the Offering Circular [is] [has been] discussed and drafted or at which other related matters [are] [have been] discussed. We [shall answer] [have answered] queries raised at such meetings on an informal basis but you should neither act nor refrain from acting on the basis of such informal answers unless and until they are confirmed in writing by us, whether in the final comfort letter or otherwise. In the absence of such written confirmation we shall have no liability to you in contract or in tort (including negligence) for our answers[9].

28. Unless otherwise specifically agreed between the parties, we are authorised by the Issuer to speak to the Managers and other professional advisers advising on the proposed Issue. In connection with our work pursuant to this arrangement letter, we may release to the Managers and such other professional advisers any information relating to the Issuer, whether confidential or not and obtained during the course of our work or otherwise and shall not be liable to the Issuer for any use subsequently made of that information.

Timetable

29. [We will endeavour to carry out our work in accordance with a timetable to be agreed between all parties that will satisfy the requirements of the Issue.][10]. We [intend to provide] [are providing] you with our comfort letter on the date of the final Offering Circular relating to the Issue and to provide you with an updating comfort letter or to reissue our comfort letter on the date of closing of the Issue. [We will discuss with you any difficulties we encounter with this arrangement or with meeting the timetable as soon as any problems arise.][11]

Applicable Law and Jurisdiction

30. This arrangement letter shall be governed by, and construed in accordance with, [specify country (other than the US) whose laws govern the Subscription Agreement[11]] law.

The Courts of [*specify country (other than the US) whose laws govern the Subscription Agreement]* shall have exclusive jurisdiction in relation to any claim, dispute or difference concerning the arrangement letter or any comfort letter and any matter arising from them. Each party irrevocably waives any right it may have to object to an action being brought in any of those Courts, to claim that the action has been brought in an inconvenient forum or to claim that those Courts do not have jurisdiction.

Fees

31. Our fees will be the responsibility of and will be paid by the Issuer.

Other Terms and Conditions

32. In no circumstances shall we be liable, other than in the event of our bad faith or wilful default, for any loss or damage, of whatsoever nature, arising from information material to our work being withheld or concealed from us or misrepresented to us by the directors, employees, or agents of the Issuer or any other person of whom we may make enquiries, unless detection of such withholding, concealment or misrepresentation should reasonably have been expected because the fact of such withholding, concealment or misrepresentation was evident without further enquiry from the information provided to us or required to be considered by us pursuant to the procedures finally agreed upon under this letter. This clause, and any assessment of our work made pursuant to it, will have regard to the limited scope of procedures agreed under this letter.

33. The terms and conditions, which are attached as Appendix 2, also form part of this arrangement letter. These terms and conditions shall apply, as indicated in such terms and conditions, to the Issuer and the accountants, save that Paragraphs [ ] and [ ] shall apply to all the addressees of this arrangement letter.[12]

34. In the event of any inconsistency between this arrangement letter and such terms and conditions, the terms of this letter shall prevail as between the relevant parties.

Prohibition on Assignment

35. No party may assign any of its rights in relation to this arrangement letter without the prior written consent of the others against whom the rights may be asserted, save that any Manager may assign any of such rights, or such rights may pass by operation of law, to any successor to all or part of its business without such consent, provided that notice is given to us prior to any step being taken by you to enforce any rights hereunder.

Entire Agreement

36. This arrangement letter and the Appendices to it constitute the entire agreement between us and, save as provided in this arrangement letter, no change in the terms of our agreement will be effective unless agreed in writing and signed by all parties to this arrangement letter or their respective attorney.

Yours faithfully

Acknowledgement and Acceptance

[*by the Issuer and Lead Manager]*

APPENDIX 1

Names of the Managers[13]
(Subject always to compliance with the requirements
of Paragraph 2 of the arrangement letter[14])

APPENDIX 2

Further Terms and Conditions

APPENDIX 3

Text of the Draft Comfort Letter
(if appropriate – see footnote 4)

This draft is furnished solely for the purpose of indicating the form of letter that we would expect to be able to provide pursuant to this arrangement letter, the matters expected to be covered in the letter, and the nature of the procedures that we would expect to carry out with respect to such matters. The procedures outlined in this draft letter have been discussed between and agreed by the Issuer, the Lead Manager and us. Unless further procedures are agreed, we shall assume that there are no additional procedures for us to follow. The text of the letter itself will depend, of course, on the results of the procedures, which we would not expect to complete until shortly before the letter is given and in no event before the cut-off date indicated therein.

The Directors
Eurobond Issuer
Lead Manager
[Other Managers] [Other Managers identified in Appendix 1 of the Arrangement Letter]
[Date]

Dear Sirs,

PROPOSED EUROBOND ISSUE BY [EUROBOND ISSUER] ("the Issuer") [15]

We attach as Appendix 1 a copy of the Offering Circular entitled "[ ]"and dated [ ] which we have initialled for identification purposes. We attach as Appendix 2 a copy of the arrangement letter dated [ ] (the "Arrangement Letter"), the terms of which have been agreed between us, are deemed to have been incorporated in this comfort letter and govern the matters addressed by this comfort letter and its use. The terms of the Arrangement Letter are amended by the terms of this comfort letter to the extent expressly set out herein.

This letter is addressed to the Directors of Eurobond Issuer, to Lead Manager ("the Lead Manager") and to each of the [other managers whose names are set out above] [the Managers identified in Appendix 1 of the

Arrangement Letter] who have agreed to participate in the proposed issue of [*the Securities*] ("the Issue") provided they have validly authorised the Lead Manager to accept the Arrangement Letter on their behalf. Together with the Lead Manager, they are referred to as "the Managers".

This letter is furnished solely for the private information of its addressees in the context of the due diligence procedures that you undertake, or procure to be undertaken, pursuant to the guidance relating to due diligence issued by the International Capital Market Association from time to time in connection with the contents of the Offering Circular for the purpose of any defence in such context that you may wish to advance in any claim or proceeding in connection with the contents of the Offering Circular on the basis set out in the Arrangement Letter. Accordingly this letter is addressed to you for that purpose and may not be relied on by you or used for any other purpose, nor be referred to in any other document (except that reference may be made to its existence in any contract or other communication between the Issuer and/or the Managers and/or ourselves), nor made available to any other party (except that a copy may be included in the bible of transaction documents memorialising the Issue prepared for the Issuer and the Managers).

We will not accept any responsibility to any other party to whom our letter is shown or into whose hands it may come (including any Manager who has not validly authorised the Lead Manager to accept the Arrangement Letter).

In accordance with the terms of the Arrangement Letter referred to above we have read the sections of the Offering Circular identified below.

Financial Information

On pages [–], the Offering Circular sets out certain financial information for the [three] years [and six/three months] ended [*insert dates*] of the Issuer. We have read this information and have compared it with that shown in the audited financial statements [and the unaudited published interim financial statements for the [six/three] months ended [*date*]] of the Issuer. We confirm that this financial information has been accurately extracted from the audited financial statements for the relevant years [or, as the case may be, the published unaudited interim financial statements for such period]. [We did not conduct a review of such interim financial

statements in accordance with the standards and guidance issued by the [*appropriate professional body - in the United Kingdom, the Auditing Practices Board].*]

Other Financial Information

For the purposes of this letter, we have also read the items that you have identified as indicated on the attached copy of the Offering Circular [by the symbols explained below][16] and confirm that the relevant items have been accurately extracted or derived from their respective sources or have been correctly calculated as follows:

[α Compared to the audited accounts of the Issuer at [*date*] and found them to be in agreement.

δ Compared to and found to be in agreement with [*describe document*] which the Issuer has represented was [*prepared/ derived*] from the accounting records. We have not traced the information to the accounting records themselves.

π Recomputed the [*percentages/ratios etc.*] and found them to be correctly calculated].[17]

Capitalisation and Indebtedness Table

On page [ ] of the Offering Circular there is a statement of the capitalisation and indebtedness of the Issuer. We have read the capitalisation and indebtedness statement and we confirm that the shareholders' funds, borrowings and contingent liabilities at [*insert date of last previously published [audited financial statements] [unaudited interim results*[18]*]*] included in that statement have been accurately extracted [from the *[audited financial statements] [unaudited interim results*[19]*]* of the Issuer as at [*insert date of last [audited financial statements] [unaudited interim results*[19]*]*] [in relation to which we did not conduct a review in accordance with the standards and guidance issued by the [*appropriate professional body – in the United Kingdom, the Auditing Practices Board*]][19] [20].

Changes in Financial Position

For the purpose of this letter, we have performed the following limited procedures:

(1) We have:

(a) read the minutes of meetings of [*identify bodies*] of the Issuer held since [*insert the date of its last published annual financial statements*] as set out in minute books at [*insert date*] (the "cut off date") ([*together with/excluding*] the papers provided to the board for that meeting[21]), which the directors have advised us are complete; and

(b) read the [*insert date of latest*] unaudited management accounts for the [] months ended [] (the "[*Month, this year*] management accounts") (which the directors have advised us are the most recent management accounts available) and the corresponding unaudited management accounts from the previous year (the "[*Month, last year*] management accounts").

Our objective in reading the documents referred to in Paragraphs (a) and (b) above is to identify those matters which, in our view, might, prima facie, be expected to impact the figures and ratios set out in Paragraph (3) below. In the case of the minutes referred to in Paragraph (1) (a) above, our objective is also to identify such matters in those minutes from which it is evident without further enquiry that the events reported or decisions of the Board will be given accounting recognition [in accordance with *state applicable professional guidance*[22]*]* in the next published financial statements of the Issuer following the date of this letter (being matters that will be disclosed under Paragraph (5) (c) below).

(2) We have made enquiries of *[give name and positions of directors, managers and other staff of the Issuer with responsibility for financial and accounting matters to whom enquiries were addressed]* (the "Persons Responsible for Financial and Accounting Matters") as to whether:

(a) those matters identified by us in the course of the work undertaken pursuant to Paragraph (1) above have been reflected in the [*month, this year*] management accounts upon which the figures and ratios referred to in Paragraph (3) below are based; and

(b) the [*Month, this year*] management accounts have been prepared and presented on a basis consistent with the

accounting policies normally adopted by the Issuer and applied in preparing the *[insert date of latest*] audited accounts.

(3) We have compared the amounts shown in Appendix 3 prepared by management of the Issuer, (the "Schedule"), relating to [*[items to be agreed*[23]*] [for example turnover, profit on ordinary activities before taxation, net interest expense, depreciation of fixed assets, share capital, shareholders' funds, borrowings due after more than one year ("long-term debt"), net current assets, total current assets and total current liabilities*] to the [*month, this year*] management accounts, [*month, last year*] management accounts or [*insert date of latest*] audited accounts as appropriate and found them to be in agreement. We have recomputed the ratios set out in the schedule on the bases set out therein and found them to be correctly calculated.]

(4) The procedures described above do not constitute an audit or review made in accordance with any generally accepted auditing standards. Nor do they provide any assurance that the [*month, this year*] management accounts have been prepared on a basis consistent with the [*month, last year*] management accounts, that such management accounts have been prepared in a reliable manner or that either have been prepared on a basis consistent with the [*insert date of latest*] audited accounts. Consequently, our procedures would not necessarily reveal matters of significance with respect to the comments made in the following Paragraphs and we make no representations as to the sufficiency for your purposes of any such procedures.

(5) Solely on the basis of the foregoing procedures we noted and draw to your attention:

(a) *[Insert findings in relation to the matters referred to in Paragraph (3) above which are germane to the conclusion in Paragraph (6) below;]*

(b) *[Insert changes, if any, identified in the basis of preparing or presenting the accounts reviewed or, if there are none, state this; and]*

(c) *[Insert matters revealed by the minutes of the Issuer from which it is evident without further enquiry that the events*

reported or decisions of the Board will be given accounting recognition [in accordance with the applicable professional guidance referred to in the final Paragraph of Paragraph (1)] in the next published financial statements of the Issuer following the date of this letter or, if there are none, state this.]

(6) *[Except for the matter(s) detailed in Paragraph (5) above]*, [N/n] othing came to our attention as a result of the foregoing procedures that caused us to believe that:

(a) at [*insert date of latest management accounts*] there were any decreases in the *[share capital, shareholders' funds, net current assets or total current assets]* or increase in *[long-term debt or total current liabilities]* of the Issuer compared with the corresponding figures in the [*insert date of latest*] audited financial statements; and

(b) in the period from [*insert date of first day after end of last audited financial statements*] to [*date of latest management accounts*] there was any decrease in *[turnover, profit on ordinary activities before taxation]* or increase in *[net interest expense, depreciation of fixed assets]*, compared to the corresponding period in the preceding year as shown in the [*month, last year*] management accounts.

(7) Since the Directors have advised us that no financial statements have been prepared up to any date subsequent to [*insert date of latest management accounts*], the procedures carried out by us with respect to changes in financial statement items after [*insert date of latest management accounts*] have of necessity been even more limited than those carried out for the period up to that date. Up to the cut off date, we have made enquiries of the Persons Responsible for Financial and Accounting Matters identified in Paragraph (2) above as to:

(a) whether there has been any decrease in [*share capital, net current assets or net assets [[same items as in Paragraph (6)]*] or increase in [*long term debt [same items as in Paragraph (6)]*] at the cut off date as compared with the amounts shown in the [*insert date of latest*] audited financial statements of the Issuer; and

(b) whether for the period from [*insert date of first day after end of last audited financial statements*] up to the cut off date there have been any decreases in [*[turnover, profit on ordinary activities before taxation [same items as in Paragraph (6)]*] as compared with the corresponding period in the preceding year.

The Persons Responsible for Financial and Accounting Matters identified in Paragraph (2) above confirmed that *[, save for the matters set out in Paragraph (5) above and save for [ ],*] they were not aware of any such increase in [*specify items*] or decreases in any of the other items in Paragraph (7) (a) or (b) above. On the basis of the responses to these enquiries and our reading of the minutes as described in Paragraph (1) above, nothing has come to our attention which causes us to believe that *[, save for the matters set out in Paragraph (5)(a) above,*] there has been any such increase or decrease.

Contingent Liabilities attributable to financial instruments

In relation to contingent liabilities attributable to financial instruments only (hereinafter "Contingent Liabilities"), in addition to reading the minutes of meetings and unaudited management accounts described in each case in Paragraph 1(a) and (b) of this letter, we have:

(a) read a schedule of Contingent Liabilities contained in Appendix 4 prepared by management of the Issuer setting out any Contingent Liabilities existing at the cut-off date which, in their view, would be expected to be disclosed pursuant to [*applicable professional guidance*] [24] in any published financial statements of the Issuer were they to be prepared at the cut off date; and

(b) made enquiries of the Persons Responsible for Financial and Accounting Matters as to whether they are aware of any other Contingent Liabilities which, in their view would be expected to be disclosed pursuant to [*applicable professional standard referred to in Paragraph (a) above*] in any published financial statements of the Issuer were they to be prepared at the cut off date.

In reading the documents referred to in Paragraphs (1) (a) and (b) above we considered whether there were any matters set out therein which it is evident without further enquiry are Contingent Liabilities and compared our findings to the schedule prepared by management of the Issuer referred to above.

[Insert any Contingent Liabilities which are revealed by the procedures and the enquiries set out above and which have been omitted from the schedule of Contingent Liabilities prepared by management of the Issuer pursuant to Paragraph (a) above.]

General

Any opinions expressed on financial information outside the context of the Arrangement Letter were or are expressed solely in the context of the specific terms and conditions governing their preparation. In particular, the terms of the Arrangement Letter and any action pursuant to it shall be additional to and shall not detract from or change in any way any legal rights which any party to this letter may otherwise have acquired, whether in contract or in tort, in connection with our audits of the financial statements of the Issuer. Save as may be expressly recorded in this letter, we do not accept any responsibility for any other reports or letters beyond any responsibility that we owed to those to whom our reports or letters were addressed at the date of their issue.

This letter should not be relied on as if it had been provided in accordance with the standards and practice of any professional body in any jurisdiction other than the [*appropriate professional standard – in the United Kingdom, the Investment Circular Reporting Standards issued by the Auditing Practices Board of the United Kingdom*].

Our work did not extend to the period from the cut off date to the date of this letter.

This comfort letter may only be relied upon in respect of the matters to which it refers and as of its date. In relying upon this comfort letter, you agree (save as otherwise expressly agreed in the Arrangement Letter) that we have no responsibility to and we will not perform any work subsequent to the date of this comfort letter nor to consider, monitor, communicate or report any events or circumstances which may occur or may come to light subsequent to the date of this letter.

This letter is not issued in accordance with the provisions of the American Institute of Certified Public Accountants, Statement on Auditing Standards No 72, "Letters for Underwriters and Certain Other Requesting Parties", as that standard is not required for such letters issued under [*appropriate professional body*] auditing standards. This letter is not intended to be relied on in the United States and we accept no responsibility for any use that you may make of it in the United States. Subject always to the previous sentence, it may be disclosed, referred to and/or produced as provided for in paragraph 11 of the Arrangement Letter.

Yours faithfully

APPENDIX 1

Offering Circular

APPENDIX 2

Arrangement Letter

APPENDIX 3

Schedule of Changes prepared by Management[25]

APPENDIX 4

Schedule of Contingent Liabilities prepared by Management

Notes

[1] *If the bond issue is guaranteed, separate arrangement letters may be necessary for the Issuer and the Guarantor or amendments will need to be made throughout the arrangement letter and the comfort letter to refer to the Guarantor as well as the Issuer. In the event of any other support or keepwell arrangements, the parties may agree that a separate arrangement letter may be necessary in respect of the entity providing such support.*

[2] *Where the bonds will be listed on a Stock Exchange, the name of the relevant exchange should be inserted. It is understood that this form of arrangement letter may be used in the case of unlisted bond issues for which an Offering Circular or Information Memorandum is available.*

[3] *Verification in this context involves seeking internal or external evidence to corroborate the information provided to the accountants pursuant to the procedures agreed upon in the Arrangement Letter, for example, by checking data to source documentation or other internal material and/or seeking independent evidence or confirmation from sources external to or from third parties unconnected with either the Issuer or its Group. Verification does not imply any review of the reliability of the source documentation or other material.*

[4] *It is acknowledged that the accountants may be asked to read and comment upon references to US or other GAAP in the Offering Circular or, subject to agreement of terms, provide other services in connection with the financial information contained in the Offering Circular.*

[5] *The first draft of the arrangement letter will include the form of comfort letter in Appendix 3. The final arrangement letter will include these sentences if it predates the issuance of the comfort letter. If the arrangement letter and the comfort letter are signed contemporaneously, these sentences will be omitted.*

[6] *If specific procedures and appropriate terms (e.g. as to timing) are agreed between all parties, the accountants may undertake additional work (for example in relation to the Issuer's current overall financial position).*

[7] *This clause is not intended to preclude either (1) existing audited accounts from being incorporated by reference, or (2) reference being made in the Offering Circular to the fact that the accounts have been audited and have received an unqualified opinion.*

[8] *Where the inclusion of an auditors' report in the Offering Circular, and the auditors' consent to such inclusion, is agreed between the parties to the arrangement letter or is required by law or regulation, the auditors will prepare and expect to issue a letter giving their consent to the inclusion in the Offering Circular of that audit report, the references to it and to their name in the form and context in which they are included*

[and, where the issue is to be London listed, their authorisation of the contents of their report for the purpose of Regulation 6(1)(e) of The Financial Services and Markets Act 2000 (Official Listing of Securities) Regulations 2001].

[9] *If specific matters are discussed which the Managers wish to be able to rely upon in accordance with this arrangement letter, the Issuer and the Lead Manager should arrange for them to be confirmed in writing by the accountants. If the accountants are willing to confirm such matters in writing, further work and an extension of the terms of arrangement are likely to be required.*

[10] *It may not be appropriate to include this sentence if the arrangement letter is signed contemporaneously with the comfort letter.*

[11] *The law of the Subscription Agreement governs relations between the Managers and the Issuer. Where the law governing the Subscription Agreement is not the law of a country with developed jurisprudence in international financial transactions, the parties will agree on a suitable alternative law to govern the relations between them established by this letter.*

[12] *It is not intended that such standard terms and conditions should in any way detract from the nature of the relationship between the parties as set out in paragraphs 6 to 9 inclusive of, or the work to be undertaken pursuant to, this letter. It is acknowledged that the agreement by Managers to any provision that limits an accounting firm's liability will not, by itself, be regarded as altering current market practice in relation to such matters. It is envisaged that particular provisions of the standard terms and conditions will apply to the Managers. The accounting firms expect to include clauses tailored to the circumstances addressing, in so far as they are not addressed in the relevant firm's standard terms and conditions, such matters as, in the case of terms applicable only to the Issuer, the representations to be given by directors of the Issuer and any indemnity to be given by the Issuer and, as regards both the Issuer and the Managers, arrangements for updating the comfort letter, force majeure, and in some jurisdictions certain professional requirements of the relevant local professional bodies.*

[13] *The legal name of each manager should be specified.*

[14] *In the case of a change in the identity of a Manager, the procedure set out in Paragraph 4 of this letter must be complied with.*

[15] *If the bond is guaranteed, separate arrangement letters may be necessary for the Issuer and the Guarantor or amendments will need to be made throughout the comfort letter to refer to the Guarantor as well as to the Issuer. In the event of any other support or keepwell arrangements, the parties may agree that a separate arrangement letter may be necessary in respect of the entity providing such support.*

[16] *The method of identification shall be agreed between the parties.*

[17] *These procedures are illustrative only.*

[18] *It will not normally be possible to confirm the accurate extraction of information relating to contingent liabilities from unaudited interim results because they are not normally disclosed therein.*

[19] *Where the procedures relating to Changes in Financial Position and Contingent Liabilities (set out in the following section) indicate that there has been substantial debt incurred or repaid or there have been significant changes in the share capital of the Issuer or a contingent liability has been incurred since the date of the latest published annual or interim financial statements (as the case may be), disclosure of those matters in a footnote to the Capitalisation and Indebtedness Table may be necessary. The accountants would normally agree to extend the procedures to confirm these transactions to the extent that relevant information is available in the Issuer's accounting records.*

[20] *If the change in capitalisation or indebtedness (other than contingent liabilities) is such that the Capitalisation and Indebtedness Table is required to be prepared as at a date more recent than the last published annual or interim financial statements, on appropriate terms and provided sufficient time is available, the accountants may agree to conduct a review in accordance with the standards and guidance issued by the relevant professional body. The work that the accountants would undertake in relation to contingent liabilities attributable to financial instruments will be limited to that described below under the heading "Contingent Liabilities attributable to financial instruments".*

[21] *Where practicable, on appropriate terms and provided sufficient time is available, the accountants may agree to review the papers provided to the board at board meetings.*

[22] *In the United Kingdom, this would be Paragraph 20 of Financial Reporting Standard No 3, which states that the following items, including provisions in respect of such items, should be shown separately on the face of the profit and loss account after operating profit and before interest, and included under the appropriate heading of continuing or discontinued operations:*

(a) profits or losses on the sale or termination of an operation;

(b) costs of a fundamental reorganisation or restructuring having a material effect on the nature and focus of the reporting entity's operations; and

(c) profits or losses on the disposal of fixed assets.

In calculating the profit or loss in respect of the above items consideration should only be given to revenue and costs directly related to the items in question.

Where an equivalent standard or regulation exists in a particular country, that standard will apply. In other circumstances, that Paragraph 20 of Financial Reporting Standard No 3 would ordinarily be applied in other countries.

[23] *Consideration should be given to any special items having regard to the Issuer's business to be included in the list of financial measures which the accountants would ordinarily consider and on which they would report to the Managers in accordance with the terms of this arrangement letter.*

[24] *In the United Kingdom, Financial Reporting Standard 12, which requires a contingent liability to be disclosed unless a transfer of economic benefits is remote. For these purposes, a contingent liability is defined as:*

(a) a possible obligation that arises from past events and whose existence will be confirmed only by the occurrence of one or more uncertain future events not wholly within the entity's control; or

(b) a present obligation that arises from past events but is not recognised because:

(i) it is not probable that a transfer of economic benefits will be required to settle the obligation; or

(ii) the amount of the obligation cannot be measured with sufficient reliability.

In other jurisdictions, contingent liability will be defined by reference to International Accounting Standard 37 "Provisions, Contingent Liabilities and Contingent Assets".

The work on contingent liabilities will ordinarily only be considered by the accountants where the Issuer has a responsibility under the relevant listing rules to provide a statement in the Offering Circular in respect of contingent liabilities.

[25] *This would be the Schedule prepared by management of the Issuer, which is referred to in paragraph (3) of the comfort letter. It would contain the items to be agreed pursuant to paragraph (3) and footnote 23 of the comfort letter as of the date of the relevant management accounts for this financial year, the date of the relevant management accounts for the last financial year and the change and percentage change in these items.*

SECTION SEVEN
ICMA STANDARD DOCUMENTATION AND STANDARD LANGUAGE

VII

Standard Form Stabilising Agent Appointment Letter – ICMA Agency Terms

This has been withdrawn

SECTION SEVEN
ICMA STANDARD DOCUMENTATION AND STANDARD LANGUAGE

VIII

Standard Collective Action Clauses (CACs) for the Terms and Conditions of Sovereign Notes

STANDARD COLLECTIVE ACTION CLAUSES (CACs) FOR THE TERMS AND CONDITIONS OF SOVEREIGN NOTES

ENGLISH LAW, FISCAL AGENT STRUCTURE

[•] MEETINGS OF NOTEHOLDERS; WRITTEN RESOLUTIONS

(a) Convening Meetings of Noteholders

The Fiscal Agency Agreement contains provisions for convening meetings of Noteholders to consider matters relating to the Notes, including the modification of any provision of these Conditions or the provisions of the Fiscal Agency Agreement. Such a meeting may be convened by the Issuer or the Fiscal Agent and shall be convened by the Issuer or the Fiscal Agent at any time upon the request in writing of holders of at least 10 per cent of the aggregate principal amount of the outstanding Notes.

(b) Quorum

The quorum at any meeting of Noteholders convened to vote on an Extraordinary Resolution will be:

(i) one or more persons present and holding or representing at least 50 per cent of the aggregate principal amount of the outstanding Notes; or

(ii) where a meeting is adjourned and rescheduled owing to a lack of quorum, at any rescheduled meeting of Noteholders, one or more persons present and holding or representing at least 25 per cent of the aggregate principal amount of the outstanding Notes;

provided, however, that any proposals relating to a Reserved Matter may only be approved by an Extraordinary Resolution passed at a meeting of Noteholders at which one or more persons present and holding or representing at least 75 per cent of the aggregate principal amount of the outstanding Notes form a quorum.

(c) Reserved Matters

In these Conditions, "**Reserved Matter**" means, subject as provided in paragraph (d) *(Matters requiring unanimity)*, any proposal:

(i) to change the date, or the method of determining the date, for payment of principal, interest or any other amount in respect of the Notes, to reduce or cancel the amount of principal, interest or any other amount payable on any date in respect of the Notes or to change the method of calculating the amount of principal, interest or any other amount payable in respect of the Notes on any date;

(ii) to change the currency in which any amount due in respect of the Notes is payable or the place in which any payment is to be made;

(iii) to change the quorum required at any meeting of Noteholders or the majority required to pass an Extraordinary Resolution, Written Resolution or any other resolution of Noteholders or the number or percentage of votes required to be cast, or the number or percentage of Notes required to be held, in connection with the taking of any decision or action by or on behalf of the Noteholders or any of them;

(iv) to change this definition, the definition of "Extraordinary Resolution", the definition of "outstanding" or the definition of "Written Resolution";

(v) to change or waive the provisions of the Notes set out in Condition [•] *(Status)* [or other specified substantive covenants as appropriate, to be determined on a case-by-case basis]; or

(vi) to change any provision of the Notes describing circumstances in which Notes may be declared due and payable prior to their scheduled maturity date, set out in Condition [•] *(Events of Default)*.

(d) Matters requiring unanimity: Any proposal:

(i) to change the law governing the Notes, the courts to the jurisdiction of which the Issuer has submitted in the Notes, the

Issuer's obligation to maintain an agent for service of process in England or the Issuer's waiver of immunity, in respect of actions or proceedings brought by any Noteholder, set out in Condition [•] *(Governing Law and Jurisdiction)*;

(ii) to modify any provision of these Conditions in connection with any exchange or substitution of the Notes for, or the conversion of the Notes into, any other obligations or securities of the Issuer or any other person, which would result in the Conditions as so modified being less favourable to the holders of Notes which are subject to the Conditions as so modified than:

(A) the provisions of the other obligations or securities of the Issuer or any other person resulting from the relevant exchange or substitution or conversion; or

(B) if more than one series of other obligations or securities results from the relevant exchange or substitution or conversion, the provisions of the resulting series having the largest aggregate principal amount; or

(iii) to modify the provisions of this paragraph (d) *(Matters requiring unanimity)*,

may only be given effect with the consent of the holders of all of the outstanding Notes.

(e) Modifications

Subject as provided in paragraph (d) *(Matters requiring unanimity),* any modification of any provision of these Conditions may be made if approved by an Extraordinary Resolution or a Written Resolution. In these Conditions, "**Extraordinary Resolution**" means a resolution passed at a meeting of Noteholders duly convened and held in accordance with the Fiscal Agency Agreement by a majority of at least:

(i) in the case of a Reserved Matter, 75 per cent of the aggregate principal amount of the outstanding Notes; or

(ii) in the case of a matter other than a Reserved Matter, 66 2/3 per cent of the aggregate principal amount of the outstanding Notes which are represented at that meeting.

Any Extraordinary Resolution duly passed at any such meeting shall be binding on all the Noteholders, whether present or not and whether they voted in favour or not, and all Couponholders.

(f) Written resolutions

In addition, the Fiscal Agency Agreement contains provisions relating to Written Resolutions. A "**Written Resolution**" is a resolution in writing signed by or on behalf of the holders of at least 75 per cent of the aggregate principal amount of the outstanding Notes, in the case of a Reserved Matter, or 66 2/3 per cent of the aggregate principal amount of the outstanding Notes, in the case of a matter other than a Reserved Matter. Any Written Resolution may be contained in one document or several documents in the same form, each signed by or on behalf of one or more Noteholders. Any Written Resolution shall be binding on all of the Noteholders, whether or not signed by them, and on all Couponholders.

(g) Manifest error, etc.

The Notes, these Conditions and the provisions of the Fiscal Agency Agreement may be amended without the consent of the Noteholders or the Couponholders to correct a manifest error. In addition, the parties to the Fiscal Agency Agreement may agree to modify any provision thereof, but the Issuer shall not agree, without the consent of the Noteholders, to any such modification unless it is of a formal, minor or technical nature or it is not materially prejudicial to the interests of the Noteholders.

(h) Notes controlled by the Issuer

For the purposes of (i) ascertaining the right to attend and vote at any meeting of Noteholders or the right to sign, or authorise the signature of, any Written Resolution, (ii) this Condition [•] *(Meetings of Noteholders; Written Resolutions)* and Schedule [•] *(Meetings of Noteholders)* to the Fiscal Agency Agreement, (iii) Condition [•] *(Noteholders' Committee)* and (iv) Condition [•] *(Events of Default)*, those Notes (if any) which are held in circumstances where the Issuer has the power to direct the casting of votes in respect of such Notes, whether directly or indirectly, shall (unless and until ceasing to be so held) be disregarded and be deemed not to remain outstanding. Without prejudice to the generality of the previous sentence, the Issuer shall be deemed to have the power to direct the casting of votes in respect of a Note if the Note is held by or on behalf of

the Issuer or by or on behalf of any person which is owned or controlled directly or indirectly by the Issuer or by any public sector instrumentality of the Issuer, where:

(i) "**public sector instrumentality**" means *[insert name of central bank [and any other governmental agency which it is desirable to mention]]*, any [other] department, ministry or agency of the government of *[insert name of country]* or any corporation, trust, financial institution or other entity owned or controlled by the government of *[insert name of country]*; and

(ii) "**control**" means the power, directly or indirectly, through the ownership of voting securities or other ownership interests or otherwise, to direct the management of or elect or appoint a majority of the board of directors or other persons performing similar functions in lieu of, or in addition to, the board of directors of a corporation, trust, financial institution or other entity.

In advance of any meeting of Noteholders or Written Resolution the Issuer shall provide to the Fiscal Agent a certificate of the Issuer setting out the total number of Notes which are held in circumstances where the Issuer has at the date of such certificate the power to direct the casting of votes in respect of such Notes. The Fiscal Agent shall make any such certificate available for inspection during normal business hours at its Specified Office and, upon reasonable request, will allow copies of such certificate to be taken.

[•] NOTEHOLDERS' COMMITTEE

(a) Appointment

The Noteholders may, by a resolution passed at a meeting of Noteholders duly convened and held in accordance with the Fiscal Agency Agreement by a majority of at least 50 per cent in aggregate principal amount of the Notes then outstanding, or by notice in writing to the Issuer (with a copy to the Fiscal Agent) signed by or on behalf of the holders of at least 50 per cent in aggregate principal amount of the Notes then outstanding, appoint any person or persons as a committee to represent the interests of the Noteholders if any of the following events has occurred:

(i) an Event of Default;

(ii) any event or circumstance which could, with the giving of notice, lapse of time, the issuing of a certificate and/or fulfilment of any other requirement provided for in Condition [•] *(Events of Default)* become an Event of Default; or

(iii) any public announcement by the Issuer, to the effect that the Issuer is seeking or intends to seek a restructuring of the Notes (whether by amendment, exchange offer or otherwise),

provided, however, that no such appointment shall be effective if the holders of more than 25 per cent of the aggregate principal amount of the outstanding Notes have either (A) objected to such appointment by notice in writing to the Issuer (with a copy to the Fiscal Agent) during a specified period following notice of the appointment being given (if such notice of appointment is made by notice in writing to the Issuer) where such specified period shall be either 30 days or such other longer or shorter period as the committee may, acting in good faith, determine to be appropriate in the circumstances, or (B) voted against such resolution at a meeting of Noteholders duly convened and held in accordance with the Fiscal Agency Agreement. Such committee shall, if appointed by notice in writing to the Issuer, give notice of its appointment to all Noteholders in accordance with Condition [•] *(Notices)* as soon as practicable after the notice is delivered to the Issuer.

(b) Powers

Such committee in its discretion may, among other things, (i) engage legal advisers and financial advisers to assist it in representing the interests of the Noteholders, (ii) adopt such rules as it considers appropriate regarding its proceedings, (iii) enter into discussions with the Issuer and/or other creditors of the Issuer, (iv) designate one or more members of the committee to act as the main point(s) of contact with the Issuer and provide all relevant contact details to the Issuer, (v) determine whether or not there is an actual or potential conflict of interest between the interests of the holders of the Notes then outstanding and the interests of the holders of debt securities of any one or more other series issued by the Issuer and (vi) upon making a determination of the absence of any actual or potential conflict of interest between the interests of the holders of the Notes then outstanding and the interests of the holders of debt securities of any one or more other series issued by the Issuer, agree to

transact business at a combined meeting of the committee and such other person or persons as may have been duly appointed as representatives of the holders of securities of each such other series. Except to the extent provided in this paragraph (b) (Powers), such committee shall not have the ability to exercise any powers or discretions which the Noteholders could themselves exercise. The Issuer shall pay any fees and expenses which are reasonably incurred by any such committee or any such combined committee (including, without limitation, the costs of giving notices to Noteholders, fees and expenses of the committee's legal advisers and financial advisers, if any) within 30 days of the delivery to the Issuer of a reasonably detailed invoice and supporting documentation.

[•] EVENTS OF DEFAULT

(a) Declaration of Acceleration

If any of the following events (each an "**Event of Default**") occurs and is continuing:

[Insert Events of Default]

then the holders of at least 25 per cent in aggregate principal amount of the outstanding Notes may, by notice in writing to the Issuer (with a copy to the Fiscal Agent), declare all the Notes to be immediately due and payable, whereupon they shall become immediately due and payable at their principal amount together with accrued interest without further action or formality. Notice of any such declaration shall promptly be given to all other Noteholders by the Issuer.

(b) Withdrawal of Declaration of Acceleration

If the Issuer receives notice in writing from holders of at least 50 per cent in aggregate principal amount of the outstanding Notes to the effect that the Event of Default or Events of Default giving rise to any above mentioned declaration of acceleration is or are cured following any such declaration and that such holders wish the relevant declaration to be withdrawn, the Issuer shall, give notice thereof to the Noteholders (with a copy to the Fiscal Agent), whereupon the relevant declaration shall be withdrawn and shall have no further effect but without prejudice to any rights or obligations which may have arisen before the Issuer gives such

notice (whether pursuant to these Conditions or otherwise). No such withdrawal shall affect any other or any subsequent Event of Default or any right of any Noteholder in relation thereto.

7–IX
STANDARD FORM SELLING RESTRICTIONS

A Debt (UK)

B Equity (EEA Prospectus Directive) – *this is provisionally deleted pending review*

7–IX–A
STANDARD FORM SELLING RESTRICTIONS
DEBT (UK)

1 – INTRODUCTION

Users should note that programmes which include the earlier version of ICMA suggested debt selling restrictions do not need to be updated to reflect the changes reflected below but, if an update is otherwise being undertaken, this later version of debt selling restrictions should be considered. Users may, however, wish to include the new form of debt selling restrictions in a subscription agreement for a drawdown and in the relevant Final Terms.

This Note identifies:

- a standard form of public offer selling restriction that is appropriate for the UK and potentially many other Member States of the EEA[1] that have implemented the Prospectus Directive; and

- standard UK selling restriction language that deals with non-Prospectus Directive related securities laws,

to be used in relation to MTN programmes and stand alone debt issues. In addition to the selling restrictions, a suggested form of legend for inclusion in a summary, an optional legend for inclusion in the prospectus and suggested disclosure relating to the conditions for determining the price and amount of notes to be issued under an MTN programme are set out.

The purpose of an ICMA form is to assist market efficiency by providing a generally accepted standard format. The forms of language have been agreed between a group of City of London capital markets law firms, and have been circulated to a number of other law firms prior to publication. The ICMA is extremely grateful for the advice and assistance it has received.

The public offer selling restriction reflects the requirements of the Prospectus Directive (as further described below) as amended by Directive 2010/73/EU (the 2010 PD Amending Directive) and sets out the framework so that it can apply to each EEA Member State from the date on which it first implements the Prospectus Directive, irrespective of the date or dates on which it implements the 2010 PD Amending Directive in whole or in part. The group of City of London capital markets law firms that has helped the ICMA prepare these selling restrictions has agreed that they are appropriate for most MTN programmes and stand alone debt issues for which offers in the United Kingdom may be made. The ICMA also understands that they are appropriate for most MTN programmes and stand alone debt issues for which offers in many other EEA Member States may be made, in particular since the Prospectus Directive was intended to be a maximum harmonisation directive creating a uniform approach to public offer regulation throughout the EEA. However, it should be noted that there remain potential local law issues in individual EEA Member States, including in relation to the particular implementation of the Prospectus Directive in those Member States, which may mean that separate and/or additional selling restrictions may be appropriate. Additional local law issues may arise out of the implementation of the 2010 PD Amending Directive. In addition, it should be noted that each Member State may have other securities laws that require consideration, and it is not the intention of these selling restrictions to cover all of the laws that may be relevant. ICMA members should consider seeking local legal advice for transactions on a case-by-case basis.

How the form of selling restrictions endeavours to reflect the Prospectus Directive

Article 3 of the Prospectus Directive prohibits offers of securities to the public in any EEA Member State that has implemented the Prospectus Directive as written unless a prospectus has been published in, or published elsewhere and notified to, that Member State in accordance with the Prospectus Directive. For convenience, the definition of the term "offer to the public" in the Prospectus Directive has been specifically replicated in the form of selling restrictions. In order to comply with the disclosure requirements for a prospectus, the prospectus must also disclose the terms and conditions of the offer, as more specifically set out in the relevant Annexes to Commission Regulation (EC) No. 809/2004.

Under the Prospectus Directive, certain public offers are exempt from the prospectus publication requirement including, in particular, offers only to certain types of qualified investors and offers addressed to less than a specified number of persons per EEA Member State other than qualified investors. These exemptions are reflected in the suggested forms of public offer selling restriction. Certain of the exemptions have been amended by the 2010 PD Amending Directive and the relevant parts of the selling restriction have been updated accordingly.

Where a programme is being established or updated, Section 2 should be used, whether or not all offers of Notes thereunder will be made pursuant to one or more of these exemptions. Where an offering circular or prospectus is being issued on a standalone basis, and the intention is that all offers of Notes thereunder will be made pursuant to one or more of the exemptions under the Prospectus Directive, Section 3 should be used. Where an offering circular or prospectus is being issued on a standalone basis, and the intention is that the prospectus will cover offers that are not within any of these exemptions in some Member States (whether or not offers within one of these exemptions will also be made in other Member States), Section 4 should be used.

Offers under paragraph (a) of the suggested form of public offer selling restriction for MTN programmes in Section 2.1 (which deals with offers to non-exempt persons) may only be made if so specified in the final terms. In any event, paragraph (a) is expressed to apply only for the period specified in the prospectus or the final terms for a particular debt issue, if and as applicable, and only with respect to the particular offer or offers specified in the prospectus or the final terms. The public offer selling restriction in Section 4.1 is similarly expressed to apply only for the period specified within that selling restriction. For the United Kingdom, and perhaps for other EEA Member States, this reflects the freedom of issuers to limit the scope of their prospectuses or final terms with respect to any particular offer specified in those documents.

The public offer selling restriction should not be read as implying an update covenant by the issuer, whether for the period for which the prospectus or final terms is specified to be valid or beyond. As a separate matter, however, issuers should have regard to the requirements in Article 16 of the Prospectus Directive to update any prospectus by publication of a supplement where a significant new factor, material mistake or inaccuracy arises or is noted between the time the prospectus is approved

and the final closing of the offer or, as the case may be, the time when trading begins.

Paragraph (d) of the form of public offer selling restriction for MTN programmes in Section 2.1 and paragraph (c) of the forms of public offer selling restriction for standalone debt issues in Sections 3.1 and 4.1 reflect the other exemptions in Article 3(2) of the Prospectus Directive. The proviso at the end of each public offer selling restriction requires the underwriters/dealers/managers to avoid offers which may fix the issuer (or possibly one or more underwriters/dealers/managers) with a prospectus or prospectus supplement obligation.

Under Article 3(2) of the Prospectus Directive, offers of debt securities with a minimum denomination above a certain threshold (commonly known as "wholesale debt") are exempt from the obligation to publish a prospectus. Accordingly, the form of public offer selling restriction does not apply where the minimum denomination of the securities being offered (or, in the case of MTN programmes, that may be offered), regardless of whether those securities are to be admitted to trading on a regulated market in a Member State, is at least €50,000 (or equivalent), provided that the offer is only being made in one or more Member States which will not, before the end of the offer period, have implemented the provision under the 2010 PD Amending Directive that increases this minimum denomination to €100,000. In the case of an offer being made in one or more Member States which, before the end of the offer period, have implemented this provision of the 2010 PD Amending Directive, the form of public offer selling restriction does not apply where the minimum denomination of the securities being offered (or, in the case of MTN programmes, that may be offered) is at least €100,000 (or equivalent).[2] In addition, the form of public offer selling restriction does not apply to EEA Member States, their regional or local authorities and supranationals, as such issuers are outside the scope of the Prospectus Directive. However, other securities laws may apply to such issuers, and local advice should be sought.

The first suggested form of legend for the summary reflects the requirements of Article 5(2) of the Prospectus Directive and the alternative suggested form reflects those requirements as amended by the 2010 PD Amending Directive.

The optional form of legend for inclusion in the prospectus for standalone issues (or in the base prospectus for MTN programmes) sets out the circumstances in which non-exempt offers may be made.

Changes to the form of selling restrictions pursuant to the 2010 PD Amending Directive

The 2010 PD Amending Directive was published in the Official Journal on 11 December 2010 (in force as of 31 December 2010). Member States have until 1 July 2012 to implement its provisions into national law. The 2010 PD Amending Directive introduces measures to amend certain aspects of the public offer regime, including the circumstances in which an issuer is required to publish a prospectus in connection with a public offer. In particular, the 2010 PD Amending Directive amends Article 3(2) of the Prospectus Directive by (i) increasing the maximum number of persons per Member State to whom an offer of securities may be made without triggering the requirement to publish a prospectus from less than 100 persons to less than 150 persons; (ii) increasing the maximum total consideration that an issue of securities may generate without triggering the requirement to publish a prospectus from €2,500,000 to €5,000,000; and (iii) increasing the minimum denomination for debt securities to qualify as "wholesale debt" from at least €50,000 to at least €100,000 (an amendment that widens the scope of the requirement to publish a prospectus).

In addition, the 2010 PD Amending Directive amends the definition of "qualified investor" under the Prospectus Directive (a category of persons to whom securities may be issued without triggering the requirement to publish a prospectus). The amendment aligns the concept of qualified investor with the concepts of "professional client" and "eligible counterparties" under MiFID.

During the 18 month implementation period it is likely that certain inconsistencies will arise, as some Member States will implement into national law some or all of the above provisions sooner than others. This creates the possibility that an offering of securities that is outside of the public offer regime in a Member State that has not yet implemented the 2010 PD Amending Directive (for example, an offer of Notes with a minimum denomination of €50,000 (or equivalent), could inadvertently trigger the requirement to publish a prospectus in a Member State that

has implemented some or all of the provisions of the 2010 PD Amending Directive. The standard form debt selling restrictions have therefore been amended to attempt to address this potential issue.

2 – MTN PROGRAMMES (EXEMPT AND/OR NON-EXEMPT OFFERS)

2.1 Public offer selling restriction under the Prospectus Directive[3]

« In relation to each Member State of the European Economic Area[1] which has implemented the Prospectus Directive (each, a **Relevant Member State**), each Dealer has represented and agreed, and each further Dealer appointed under the Programme will be required to represent and agree, that with effect from and including the date on which the Prospectus Directive is implemented in that Relevant Member State (the **Relevant Implementation Date**) it has not made and will not make an offer of Notes which are the subject of the offering contemplated by [the][this] [Offering Circular][Prospectus] as completed by the final terms in relation thereto to the public in that Relevant Member State except that it may, with effect from and including the Relevant Implementation Date, make an offer of such Notes to the public in that Relevant Member State:

(a) if the final terms in relation to the Notes specify that an offer of those Notes may be made other than pursuant to Article 3(2) of the Prospectus Directive in that Relevant Member State (a **Non-exempt Offer**), following the date of publication of a prospectus in relation to such Notes which has been approved by the competent authority in that Relevant Member State or, where appropriate, approved in another Relevant Member State and notified to the competent authority in that Relevant Member State, provided that any such prospectus has subsequently been completed by the final terms contemplating such Non-exempt Offer, in accordance with the Prospectus Directive, in the period beginning and ending on the dates specified in such prospectus or final terms, as applicable[4] and the Issuer has consented in writing to its use for the purpose of that Non-exempt Offer[5];

(b) at any time to any legal entity which is a qualified investor as defined in the Prospectus Directive;

(c) at any time to fewer than 100 or, if the Relevant Member State has implemented the relevant provision of the 2010 PD Amending Directive, 150, natural or legal persons (other than qualified investors as defined in the Prospectus Directive), subject to obtaining the prior consent of the relevant Dealer or Dealers nominated by the Issuer for any such offer; or

(d) at any time in any other circumstances falling within Article 3(2) of the Prospectus Directive,

provided that no such offer of Notes referred to in (b) to (d) above shall require the Issuer or any Dealer to publish a prospectus pursuant to Article 3 of the Prospectus Directive, or supplement a prospectus pursuant to Article 16 of the Prospectus Directive.

For the purposes of this provision, the expression an **offer of Notes to the public** in relation to any Notes in any Relevant Member State means the communication in any form and by any means of sufficient information on the terms of the offer and the Notes to be offered so as to enable an investor to decide to purchase or subscribe the Notes, as the same may be varied in that Member State by any measure implementing the Prospectus Directive in that Member State, the expression **Prospectus Directive** means Directive 2003/71/EC (and amendments thereto, including the 2010 PD Amending Directive, to the extent implemented in the Relevant Member State), and includes any relevant implementing measure in the Relevant Member State and the expression **2010 PD Amending Directive** means Directive 2010/73/EU. »

2. 2 Selling restrictions addressing additional United Kingdom securities laws

« Each Dealer has represented and agreed, and each further Dealer appointed under the Programme will be required to represent and agree, that:

[(a) in relation to any Notes which have a maturity of less than one year, (i) it is a person whose ordinary activities

involve it in acquiring, holding, managing or disposing of investments (as principal or agent) for the purposes of its business and (ii) it has not offered or sold and will not offer or sell any Notes other than to persons whose ordinary activities involve them in acquiring, holding, managing or disposing of investments (as principal or as agent) for the purposes of their businesses or who it is reasonable to expect will acquire, hold, manage or dispose of investments (as principal or agent) for the purposes of their businesses where the issue of the Notes would otherwise constitute a contravention of Section 19 of the FSMA by the Issuer;][6]

(b) it has only communicated or caused to be communicated and will only communicate or cause to be communicated an invitation or inducement to engage in investment activity (within the meaning of Section 21 of the FSMA) received by it in connection with the issue or sale of any Notes in circumstances in which Section 21(1) of the FSMA does not apply to the Issuer [or the Guarantor];[7] and

(c) it has complied and will comply with all applicable provisions of the FSMA with respect to anything done by it in relation to any Notes in, from or otherwise involving the United Kingdom. »

2.3 Optional legend to be included in Base Offering Circular/Base Prospectus (PD Article 3.2)[3]

« This [Offering Circular/Prospectus] has been prepared on the basis that, except to the extent sub-paragraph (ii) below may apply, any offer of Notes in any Member State of the European Economic Area which has implemented the Prospectus Directive (each, a **Relevant Member State**) will be made pursuant to an exemption under the Prospectus Directive, as implemented in that Relevant Member State, from the requirement to publish a prospectus for offers of Notes. Accordingly any person making or intending to make an offer in that Relevant Member State of Notes which are the subject of an [offering/placement] contemplated in this [Offering Circular/Prospectus] as completed by final terms

in relation to the offer of those Notes may only do so (i) in circumstances in which no obligation arises for the [Issuer] or any Dealer to publish a prospectus pursuant to Article 3 of the Prospectus Directive or supplement a prospectus pursuant to Article 16 of the Prospectus Directive, in each case, in relation to such offer, or (ii) if a prospectus for such offer has been approved by the competent authority in that Relevant Member State or, where appropriate, approved in another Relevant Member State and notified to the competent authority in that Relevant Member State and (in either case) published, all in accordance with the Prospectus Directive, provided that any such prospectus has subsequently been completed by final terms which specify that offers may be made other than pursuant to Article 3(2) of the Prospectus Directive in that Relevant Member State, such offer is made in the period beginning and ending on the dates specified for such purpose in such prospectus or final terms, as applicable,[4] and the Issuer has consented in writing to its use for the purpose of such offer.[5] Except to the extent sub-paragraph (ii) above may apply, neither the [Issuer] nor any Dealer have authorised, nor do they authorise, the making of any offer of Notes in circumstances in which an obligation arises for the [Issuer] or any Dealer to publish or supplement a prospectus for such offer. The expression **Prospectus Directive** means Directive 2003/71/EC (and amendments thereto, including the 2010 PD Amending Directive, to the extent implemented in the Relevant Member State), and includes any relevant implementing measure in the Relevant Member State and the expression **2010 PD Amending Directive** means Directive 2010/73/EU. »

2.4 Suggested form of legend for a prospectus directive compliant summary (i.e., a summary which is required to be included under the prospectus directive) (PD Article 5.2)

2.4.1 Legend to be included in the Base Prospectus as an introduction to the Summary if the Home Member State <u>has not</u> *yet implemented the changes to the Summary requirements under the 2010 PD Amending Directive*

« This summary must be read as an introduction to this Prospectus[8] and any decision to invest in the Notes should be based on a consideration of the Prospectus as a whole, including any documents incorporated by reference. Following the implementation of the relevant provisions of the Prospectus Directive (Directive 2003/71/EC) in each Member State of the European Economic Area, no civil liability will attach to the Responsible Persons[9] in any such Member State solely on the basis of this summary, including any translation thereof, unless it is misleading, inaccurate or inconsistent when read together with the other parts of this Prospectus. Where a claim relating to the information contained in this Prospectus is brought before a court in a Member State of the European Economic Area, the plaintiff may, under the national legislation of the Member State where the claim is brought, be required to bear the costs of translating the Prospectus before the legal proceedings are initiated. »

2.4.2 Legend to be included in the Base Prospectus as an introduction to the Summary if the Home Member State <u>has</u> *implemented the changes to the Summary requirements under the 2010 PD Amending Directive*

« This summary must be read as an introduction to this Prospectus[8] and is provided as an aid to investors when considering whether to invest in the Notes, but is not a substitute for the Prospectus. Any decision to invest in the Notes should be based on a consideration of the Prospectus as a whole, including any documents incorporated by reference. Following the implementation of the relevant provisions of the Prospectus Directive (Directive 2003/71/

EC, as amended) in each Member State of the European Economic Area, no civil liability will attach to the Responsible Persons[9] in any such Member State solely on the basis of this summary, including any translation thereof, unless it is misleading, inaccurate or inconsistent when read together with the other parts of this Prospectus or it does not provide, when read together with the other parts of the Prospectus, key information in order to aid investors when considering whether to invest in the Notes. Where a claim relating to the information contained in this Prospectus is brought before a court in a Member State of the European Economic Area, the plaintiff may, under the national legislation of the Member State where the claim is brought, be required to bear the costs of translating the Prospectus before the legal proceedings are initiated. »

2.5 Conditions for determining price to be included in the Base Prospectus (PD Article 8)

« The price and amount of Notes to be issued under the Programme will be determined by the Issuer and each relevant Dealer at the time of issue in accordance with prevailing market conditions. »

3 – STAND ALONE DEBT ISSUES – EXEMPT OFFERS ONLY

3.1 Public offer selling restriction under the Prospectus Directive[3]

« In relation to each Member State of the European Economic Area[1] which has implemented the Prospectus Directive (each, a **Relevant Member State**), each Manager has represented and agreed that with effect from and including the date on which the Prospectus Directive is implemented in that Relevant Member State (the **Relevant Implementation Date**) it has not made and will not make an offer of Notes which are the subject of the offering contemplated by [the] [this] [Offering Circular][Prospectus] to the public in that Relevant Member State other than:

(a) to any legal entity which is a qualified investor as defined in the Prospectus Directive;

(b) to fewer than 100 or, if the Relevant Member State has implemented the relevant provision of the 2010 PD Amending Directive, 150, natural or legal persons (other than qualified investors as defined in the Prospectus Directive), as permitted under the Prospectus Directive, subject to obtaining the prior consent of the relevant Dealer or Dealers nominated by the Issuer for any such offer; or

(c) in any other circumstances falling within Article 3(2) of the Prospectus Directive,

provided that no such offer of Notes shall require the Issuer or any Manager to publish a prospectus pursuant to Article 3 of the Prospectus Directive [or supplement a prospectus pursuant to Article 16 of the Prospectus Directive][10].

For the purposes of this provision, the expression an **offer of Notes to the public** in relation to any Notes in any Relevant Member State means the communication in any form and by any means of sufficient information on the terms of the offer and the Notes to be offered so as to enable an investor to decide to purchase or subscribe the Notes, as the same may be varied in that Member State by

any measure implementing the Prospectus Directive in that Member State, the expression **Prospectus Directive** means Directive 2003/71/EC (and amendments thereto, including the 2010 PD Amending Directive, to the extent implemented in the Relevant Member State), and includes any relevant implementing measure in the Relevant Member State and the expression **2010 PD Amending Directive** means Directive 2010/73/EU. »

3.2 Selling restrictions addressing additional United Kingdom securities laws

« Each Manager has represented and agreed that:

(a) [(i) it is a person whose ordinary activities involve it in acquiring, holding, managing or disposing of investments (as principal or agent) for the purposes of its business and (ii) it has not offered or sold and will not offer or sell the Notes other than to persons whose ordinary activities involve them in acquiring, holding, managing or disposing of investments (as principal or as agent) for the purposes of their businesses or who it is reasonable to expect will acquire, hold, manage or dispose of investments (as principal or agent) for the purposes of their businesses where the issue of the Notes would otherwise constitute a contravention of Section 19 of the FSMA by the Issuer;][6]

(b) it has only communicated or caused to be communicated and will only communicate or cause to be communicated an invitation or inducement to engage in investment activity (within the meaning of Section 21 of the FSMA) received by it in connection with the issue or sale of the Notes in circumstances in which Section 21(1) of the FSMA does not apply to the Issuer [or the Guarantor];[7] and

(c) it has complied and will comply with all applicable provisions of the FSMA with respect to anything done by it in relation to the Notes in, from or otherwise involving the United Kingdom. »

3.3 Optional legend to be included in Offering Circular/Prospectus (PD Article 3.2)[3]

« This [Offering Circular/Prospectus] has been prepared on the basis that any offer of Notes in any Member State of the European Economic Area which has implemented the Prospectus Directive (each, a **Relevant Member State**) will be made pursuant to an exemption under the Prospectus Directive from the requirement to publish a prospectus for offers of Notes. Accordingly any person making or intending to make an offer in that Relevant Member State of Notes which are the subject of the [offering/placement] contemplated in this [Offering Circular/Prospectus] may only do so in circumstances in which no obligation arises for the [Issuer] or any of the Managers to publish a prospectus pursuant to Article 3 of the Prospectus Directive [or supplement a prospectus pursuant to Article 16 of the Prospectus Directive][10], in each case, in relation to such offer. Neither the [Issuer] nor the Managers have authorised, nor do they authorise, the making of any offer of Notes in circumstances in which an obligation arises for the [Issuer] or the Managers to publish [or supplement]10 a prospectus for such offer. The expression **Prospectus Directive** means Directive 2003/71/EC (and amendments thereto, including the 2010 PD Amending Directive, to the extent implemented in the Relevant Member State), and includes any relevant implementing measure in the Relevant Member State and the expression **2010 PD Amending Directive** means Directive 2010/73/EU. »

3.4 Suggested form of legend for a Prospectus Directive compliant summary (i.e., a summary which is required to be included under the Prospectus Directive) (PD Article 5.2)

3.4.1 To be included in the Prospectus as an introduction to the Summary if the Home Member State has <u>not yet</u> implemented the changes to the Summary requirements under the 2010 PD Amending Directive

« This summary must be read as an introduction to this Prospectus[8] and any decision to invest in the Notes should

be based on a consideration of the Prospectus as a whole, including any documents incorporated by reference. Following the implementation of the relevant provisions of the Prospectus Directive (Directive 2003/71/EC) in each Member State of the European Economic Area no civil liability will attach to the Responsible Persons[9] in any such Member State solely on the basis of this summary, including any translation thereof, unless it is misleading, inaccurate or inconsistent when read together with the other parts of this Prospectus. Where a claim relating to the information contained in this Prospectus is brought before a court in a Member State of the European Economic Area, the plaintiff may, under the national legislation of the Member State where the claim is brought, be required to bear the costs of translating the Prospectus before the legal proceedings are initiated. »

3.4.2 To be included in the Prospectus as an introduction to the Summary if the Home Member State has implemented the changes to the Summary requirements under the 2010 PD Amending Directive

« This summary must be read as an introduction to this Prospectus[8] and is provided as an aid to investors when considering whether to invest in the Notes, but is not a substitute for the Prospectus. Any decision to invest in the Notes should be based on a consideration of the Prospectus as a whole, including any documents incorporated by reference. Following the implementation of the relevant provisions of the Prospectus Directive (Directive 2003/71/EC, as amended) in each Member State of the European Economic Area, no civil liability will attach to the Responsible Persons[9] in any such Member State solely on the basis of this summary, including any translation thereof, unless it is misleading, inaccurate or inconsistent when read together with the other parts of this Prospectus or it does not provide, when read together with the other parts of the Prospectus, key information in order to aid investors when considering whether to invest in the Notes. Where a claim relating to the information contained in this Prospectus is brought before a court in a Member State of

the European Economic Area, the plaintiff may, under the national legislation of the Member State where the claim is brought, be required to bear the costs of translating the Prospectus before the legal proceedings are initiated. »

4 – STAND ALONE DEBT ISSUES WHICH INCLUDE NON-EXEMPT OFFERS

4.1 Public offer selling restriction under the Prospectus Directive

« In relation to each Member State of the European Economic Area[1] which has implemented the Prospectus Directive (each, a **Relevant Member State**), each Manager has represented and agreed that with effect from and including the date on which the Prospectus Directive is implemented in that Relevant Member State (the **Relevant Implementation Date**) it has not made and will not make an offer of Notes which are the subject of the offering contemplated by [the][this] [Offering Circular] [Prospectus] to the public in that Relevant Member State other than the offers contemplated in the Prospectus in *[name(s) of Member State(s) where prospectus will be approved or passported for the purposes of a non-exempt offer]* from the time the Prospectus has been approved by the competent authority in *[name of Member State where prospectus will be approved]* and published [and notified to the relevant competent authorit(y)(ies)] in accordance with the Prospectus Directive until [ ],[11] and provided that the Issuer has consented in writing to use of the Prospectus for any such offers, except that it may, with effect from and including the Relevant Implementation Date, make an offer of such Notes to the public in that Relevant Member State:

(a) to any legal entity which is a qualified investor as defined in the Prospectus Directive;

(b) to fewer than 100 or, if the Relevant Member State has implemented the relevant provision of the 2010 PD Amending Directive, 150, natural or legal persons (other than qualified investors as defined in the Prospectus Directive), as permitted under the Prospectus Directive, subject to obtaining the prior consent of the relevant Manager or Managers nominated by the Issuer for any such offer; or

(c) in any other circumstances falling within Article 3(2) of the Prospectus Directive,

provided that no such offer of Notes shall require the Issuer or any Manager to publish a prospectus pursuant to Article 3 of the Prospectus Directive or supplement a prospectus pursuant to Article 16 of the Prospectus Directive.

For the purposes of this provision, the expression an **offer of Notes to the public** in relation to any Notes in any Relevant Member State means the communication in any form and by any means of sufficient information on the terms of the offer and the Notes to be offered so as to enable an investor to decide to purchase or subscribe the Notes, as the same may be varied in that Member State by any measure implementing the Prospectus Directive in that Member State and the expression **Prospectus Directive** means Directive 2003/71/EC (and amendments thereto, including the 2010 PD Amending Directive, to the extent implemented in the Relevant Member State), and includes any relevant implementing measure in the Relevant Member State and the expression **2010 PD Amending Directive** means Directive 2010/73/EU. »

4.2 Selling restrictions addressing additional United Kingdom securities laws

« Each Manager has represented and agreed that:

(a) [(i) it is a person whose ordinary activities involve it in acquiring, holding, managing or disposing of investments (as principal or agent) for the purposes of its business and (ii) it has not offered or sold and will not offer or sell the Notes other than to persons whose ordinary activities involve them in acquiring, holding, managing or disposing of investments (as principal or as agent) for the purposes of their businesses or who it is reasonable to expect will acquire, hold, manage or dispose of investments (as principal or agent) for the purposes of their businesses where the issue of the Notes would otherwise constitute a contravention of Section 19 of the FSMA by the Issuer;][6]

(b) it has only communicated or caused to be communicated and will only communicate or cause to be communicated an invitation or inducement to engage in investment activity (within the meaning of Section 21 of the FSMA) received by it in connection with the issue or sale of the Notes in circumstances in which Section 21(1) of the FSMA does not apply to the Issuer [or the Guarantor];[7] and

(c) it has complied and will comply with all applicable provisions of the FSMA with respect to anything done by it in relation to the Notes in, from or otherwise involving the United Kingdom. »

4.3 Optional legend to be included in the Offering Circular/ Prospectus (PD Article 3.2)

« This [Offering Circular/Prospectus] has been prepared on the basis that any offer of Notes in any Member State of the European Economic Area which has implemented the Prospectus Directive (each, a **Relevant Member State**) other than offers (the **Permitted Public Offers**) which are made prior to [ ][11], and which are contemplated in the [Offering Circular/Prospectus] in *[name(s) of Member State(s) where prospectus will be approved or passported for the purposes of a non-exempt offer]* once the [Offering Circular/Prospectus] has been approved by the competent authority in *[name of Member State where the prospectus will be approved)]* and published [and notified to the relevant competent authorit(y)(ies)] in accordance with the Prospectus Directive, and in respect of which the Issuer has consented in writing to the use of the [Offering Circular] / [Prospectus][5], will be made pursuant to an exemption under the Prospectus Directive from the requirement to publish a prospectus for offers of Notes. Accordingly any person making or intending to make an offer in that Relevant Member State of Notes which are the subject of the [offering/placement] contemplated in this [Offering Circular/Prospectus], other than the Permitted Public Offers, may only do so in circumstances in which no obligation arises for the [Issuer] or any of the Managers to

publish a prospectus pursuant to Article 3 of the Prospectus Directive or supplement a prospectus pursuant to Article 16 of the Prospectus Directive, in each case, in relation to such offer. Neither the [Issuer] nor the Managers have authorised, nor do they authorise, the making of any offer (other than Permitted Public Offers) of Notes in circumstances in which an obligation arises for the [Issuer] or the Managers to publish or supplement a prospectus for such offer. The expression **Prospectus Directive** means Directive 2003/71/EC (and amendments thereto, including the 2010 PD Amending Directive, to the extent implemented in the Relevant Member State), and includes any relevant implementing measure in the Relevant Member State and the expression **2010 PD Amending Directive** means Directive 2010/73/EU. »

4.4 Suggested form of legend for a Prospectus Directive compliant summary (i.e., a summary which is required to be included under the Prospectus Directive) (PD Article 5.2)

4.4.1 To be included in the Prospectus as an introduction to the Summary if the Home Member State <u>has not</u> *yet implemented the changes to the Summary requirements under the 2010 PD Amending Directive*

« This summary must be read as an introduction to this Prospectus[8] and any decision to invest in the Notes should be based on a consideration of the Prospectus as a whole, including any documents incorporated by reference. Following the implementation of the relevant provisions of the Prospectus Directive (Directive 2003/71/EC) in each Member State of the European Economic Area no civil liability will attach to the Responsible Persons[9] in any such Member State solely on the basis of this summary, including any translation thereof, unless it is misleading, inaccurate or inconsistent when read together with the other parts of this Prospectus. Where a claim relating to the information contained in this Prospectus is brought before a court in a Member State of the European Economic Area, the plaintiff may, under the national legislation of the Member State where the claim is brought, be required to

bear the costs of translating the Prospectus before the legal proceedings are initiated. »

4.4.2 To be included in the Prospectus as an introduction to the Summary if the Home Member State <u>has</u> implemented the changes to the Summary requirements under the 2010 PD Amending Directive

« This summary must be read as an introduction to this Prospectus[8] and is provided as an aid to investors when considering whether to invest in the Notes, but is not a substitute for the Prospectus. Any decision to invest in the Notes should be based on a consideration of the Prospectus as a whole, including any documents incorporated by reference. Following the implementation of the relevant provisions of the Prospectus Directive (Directive 2003/71/EC, as amended) in each Member State of the European Economic Area, no civil liability will attach to the Responsible Persons[9] in any such Member State solely on the basis of this summary, including any translation thereof, unless it is misleading, inaccurate or inconsistent when read together with the other parts of this Prospectus or it does not provide, when read together with the other parts of the Prospectus, key information in order to aid investors when considering whether to invest in the Notes. Where a claim relating to the information contained in this Prospectus is brought before a court in a Member State of the European Economic Area, the plaintiff may, under the national legislation of the Member State where the claim is brought, be required to bear the costs of translating the Prospectus before the legal proceedings are initiated. »

Notes

[1] *The EEA is the EU plus Iceland, Norway and Liechtenstein. Note that there may be new entrants to the EEA and therefore the concept of "Relevant Member State" still has purpose.*

[2] *Note that even in Member States that have not yet implemented the relevant provision of the 2010 PD Amending Directive it may be advisable to increase the minimum denominations of new securities now, to enable further issuances of the same series of securities (i.e. tap issues) to achieve "wholesale" treatment once the relevant amendments are introduced. It may also be important for certain issuers to have the benefit of the relevant Transparency Directive financial reporting obligations which will not be available for any issuers who issue notes with denominations of less than €100,000 (or equivalent) from 31 December 2010.*

[3] *This selling restriction should be used (and this optional legend is appropriate) where Notes may be issued (in connection with (i) stand-alone debt issues, and (ii) Programmes (in each case whether admitted to trading on a regulated market in a Member State or not) that have a denomination that is, or that allows for denominations that are, less than €100,000 (or equivalent). The 2010 PD Amending Directive increased the minimum denomination for "wholesale debt" under the Prospectus Directive from €50,000 to €100,000 (or equivalent). Although Member States have 18 months to implement the 2010 PD Amending Directive (and therefore the minimum denomination for wholesale debt in certain Member States will remain €50,000 (or equivalent) for the time being), it is advisable to use this selling restriction in connection with offers of Notes with a minimum denomination of less than €100,000 (or equivalent) because certain Member State may implement the relevant part of the 2010 PD Amending Directive sooner than others.*

Correspondingly, this selling restriction may be excluded for stand-alone debt issues if the minimum denomination of the Notes is equal to, or greater than, €100,000 (or equivalent). In the case of Programmes, this selling restriction should only be excluded where the Programme contains a blanket prohibition on the issue of Notes (whether admitted to trading on a regulated market in a Member State or not) with a denomination of less than €100,000 (or equivalent). The optional legend could similarly be excluded in such Programmes.

In the case of Programmes where the base prospectus has been approved solely for the admission of Notes with a denomination of at least €100,000 (or equivalent), sub-paragraph (a) of the selling restriction and sub-paragraph (ii) of the optional legend should be deleted as they are not appropriate for such a base prospectus. Users may want to add the following optional wording between the current sub-paragraphs (c) and (d) of the selling restriction for Programmes, if they think this would provide more clarity and guidance to readers:"(d) at any time if the denomination per [Note/unit of Notes] being offered amounts to at least €100,000 (or equivalent);".

[4] *The prospectus or final terms therefore needs to include start and end dates.*

[5] *The issuer should consider the means by which it will provide, and might subsequently withdraw, its consent to use by a third party of the prospectus in connection with a Non-exempt Offer.*

[6] *This selling restriction is included to reflect the fact that Section 19 of the FSMA effectively prohibits any person other than an authorised person permitted to accept deposits under the FSMA from taking deposits in the UK by way of business. Under the Regulated Activities Order, most securities issues do not constitute deposits. However, notes with a maturity of less than 1 year must have a minimum denomination of £100,000 (or equivalent) or more AND must be issued to professionals only, so as not to constitute deposits. This provision should be deleted if notes which have a maturity of less than one year cannot be issued under the Programme, in the case of a programme, or if the notes have a maturity of one year or more, in the case or a stand-alone debt issuance, or in any event if the Issuer is an authorised person permitted to accept deposits or an exempt person under the FSMA.*

[7] *If there is only an Issuer which is an authorised person, replace "does not" in the penultimate line with "would not, if the Issuer was not an authorised person,". If there is both an Issuer and a Guarantor and only one of them is authorised, insert after "does not" the words "or, in the case of the [Issuer][Guarantor], would not, if it was not an authorised person,".*

[8] *This definition will need to catch all parts of the prospectus if it is prepared in parts.*

[9] *This will require a definition of "Responsible Persons" to be inserted in the appropriate place in the responsibility statement.*

[10] *The reference to supplementing a prospectus pursuant to Article 16 may be deleted in circumstances where no prospectus is being or has been published (including for admission to trading purposes) that could be supplemented. For instance, it may not be relevant in a standalone transaction where all offers are to be made on an exempt basis and the securities are to be listed on an exchange-regulated market such as the Euro MTF or the Professional Securities Market.*

[11] *Insert desired wording, for instance "[date]" or " [date] or such later date as the Issuer may permit".*

7–IX–B
STANDARD FORM SELLING RESTRICTIONS EQUITY (EEA PROSPECTUS DIRECTIVE)

This is provisionally deleted pending review.

SECTION SEVEN
ICMA STANDARD DOCUMENTATION AND STANDARD LANGUAGE

X

ICMA Standard Form ECP Documentation

(a) Dealer Agreement

(b) Information Memorandum

(c) Form of Multicurrency Global Note

ICMA STANDARD FORM ECP DOCUMENTATION

DEALER AGREEMENT

DATED: [•]

[ISSUER]
AS ISSUER

[GUARANTOR]
AS GUARANTOR

[ARRANGER]
AS ARRANGER

AND

[DEALERS]
AS DEALERS

RELATING TO A [AMOUNT]

EURO-COMMERCIAL PAPER PROGRAMME

[NAME OF LAW FIRM]

CONTENTS

Clause

1. Interpretation
2. Issue
3. Representations and Warranties
4. Conditions Precedent
5. Covenants and Agreements
6. Obligations of the Dealers
7. Termination and Appointment
8. Calculation Agent
9. Status of the Dealers and the Arranger
10. Notices
11. Partial Invalidity
12. Remedies and Waivers
13. Counterparts
14. Rights of Third Parties
15. Governing Law
16. Enforcement

Schedule

1. Condition Precedent Documents
2. Selling Restrictions
3. Notification Letter for an Increase in the Maximum Amount
4. Dealer Accession Letter
5. Form of Calculation Agency Agreement
6. Signatories

THIS AGREEMENT is dated [•] and made between:

(1) [**ISSUER**] (the "**Issuer**");
(2) [**GUARANTOR**] (the "**Guarantor**");
(3) [**ARRANGER**] as arranger (the "**Arranger**"); and
(4) [**DEALERS**] (the "**Original Dealers**").

IT IS AGREED as follows:

1. INTERPRETATION

1.1 Definitions

In this Agreement:

"**Additional Dealer**" means any institution appointed as a Dealer in accordance with Clause 7.2 (Appointment of Dealers).

"**Agency Agreement**" means the issue and paying agency agreement, dated on or about the date of this Agreement, between the Issuer, the Guarantor and the Agent, providing for the issuance of and payment on the Notes.

"**Agent**" means [ ] acting as issue agent and as paying agent [and [ ] acting as sub-paying agent] for the Notes and any successor or additional agent appointed in accordance with the Agency Agreement.

"**Business Day**" means a day (other than a Saturday or Sunday) on which banks are open for general business in [London] [and [ ]].

"**Clearing System**" means Clearstream Banking, société anonyme (Clearstream, Luxembourg), Euroclear Bank S.A./N.V. as operator of the Euroclear clearing system, Euroclear France S.A. as operator of the Euroclear France clearing system or any other recognised clearing system from time to time agreed between the Dealers and the Issuer.

"[**CURRENCY**] **Equivalent**" means on any day:

(a) in relation to any [CURRENCY] Note, the nominal amount of such Note; and

(b) in relation to any Note denominated or to be denominated in any other currency, the amount in [CURRENCY] which would be required to purchase the nominal amount of such Note as expressed in such other currency at the spot rate of exchange for the purchase of such other currency with [CURRENCY], as quoted by the Agent at or about 11.00 am ([Brussels/London] time) on such day.

"**Dealer**" means an Original Dealer or an Additional Dealer but excluding any institution whose appointment as a dealer has been terminated under Clause 7.1 (Termination) [provided that where any such institution has been appointed as Dealer in relation to a particular issue of Notes or period of time, the expression "Dealer" or "Dealers" shall only mean or include such institution in relation to such Notes or that time period].

"**Deed of Covenant**" means the Deed of Covenant, dated on or about the date of this Agreement, executed by the Issuer in respect of Global Notes issued under the Agency Agreement.

"**Definitive Note**" means a Note [, security printed or otherwise,] issued by the Issuer.

"**Disclosure Documents**" means, at any particular date:

(a) the Information Memorandum;

(b) [the most recently published audited [consolidated] annual financial statements of the Guarantor and the most recently published audited [unconsolidated] financial statements of the Issuer; and] [NB: check if already incorporated by reference]

(c) any other document delivered by the Issuer or the Guarantor to a Dealer which the Issuer or the Guarantor has expressly authorised in writing to be distributed to actual or potential purchasers of Notes.

"**Dollars**" and "**US$**" denote the lawful currency of the United States of America; and "**Dollar Note**" means a Note denominated in Dollars.

"**euro**" and "**€**" denote the single currency of the Member States of the European Communities that adopt or have adopted the euro as their lawful currency under the legislation of the European Community for Economic Monetary Union; and "**euro Note**" means a Note denominated in euro.

"**FSMA**" means the Financial Services and Markets Act 2000.

"**Global Note**" means a Note in global form, representing an issue of commercial paper notes of a like maturity.

"**Group**" means the [Issuer]/[Guarantor] and its Subsidiaries.

"**Guarantee**" means the guarantee dated on or about the date of this Agreement and executed as a deed by the Guarantor in respect of the obligations of the Issuer under the Notes and the Deed of Covenant.

"**Index Linked Note**" means a Note issued by the Issuer, the redemption or coupon amount of which is not fixed at the time of issue, but which is to be calculated in accordance with such formula or other arrangement as is agreed between the Issuer and the relevant Dealer at the time of agreeing the relevant Note Transaction.

"**Information Memorandum**" means the most recently published information memorandum containing information about the Issuer, the Guarantor and the Notes (including information incorporated therein by reference), as prepared by or on behalf of the Issuer and the Guarantor for use by the Dealers in connection with the transactions contemplated by this Agreement.

"**Maximum Amount**" means [AMOUNT] or such other amount as may apply in accordance with Clause 2.7 (Increase in Maximum Amount).

"**Note**" means a Definitive Note or a Global Note issued under the Agency Agreement to a Dealer.

"**Note Transaction**" means the issue by the Issuer and the subscription by a Dealer of Note(s) in accordance with Clause 2 (Issue).

"**Programme**" means the euro-commercial paper programme of the Issuer established by the Programme Agreements.

"**Programme Agreement**" means this Agreement, any agreement for a Note Transaction, the Guarantee, the Deed of Covenant or the Agency Agreement.

"**Ratings Agency**" means Moody's Investors Service, Inc. ("**Moodys**") or Standard & Poor's Rating Services, a division of The McGraw Hill Companies Inc. ("**S&P**") or any other statistical ratings organisation which rates the Issuer's debt securities.

"**Relevant Party**" means the Arranger, each Dealer, each of their respective affiliates and each person who controls them (within the meaning of section 15 of the Securities Act or section 20 of the United States Securities Exchange Act of 1934, as amended), together with each of their respective directors, officers, employees and agents.

"**Sterling**" and "**£**" denote the lawful currency of the United Kingdom; and "**Sterling Note**" means a Note denominated in Sterling.

"**Subsidiary**" means:

(a) an entity of which a person has direct or indirect control or owns directly or indirectly more than 50 per cent. of the voting capital or similar right of ownership and "**control**" for this purpose means the power to direct the management and the policies of the entity whether through the ownership of voting capital, by contract or otherwise; or

(b) an entity whose financial statements are, in accordance with applicable law and generally accepted accounting principles, consolidated with those of another person.

"**Yen**" and "**¥**" denote the lawful currency of Japan; and "**Yen Note**" means a Note denominated in Japanese Yen.

1.2 **Construction**

(a) In this Agreement, unless the contrary intention appears, a reference to:

(i) a provision of a law is a reference to that provision as amended, extended, applied or re-enacted and includes any subordinate legislation;

(ii) a Clause or a Schedule is a reference to a clause of or a schedule to this Agreement;

(iii) a person includes any individual, company, corporation, unincorporated association or body (including a partnership, trust, joint venture or consortium), government, state, agency, organisation or any other entity whether or not having separate legal personality, and references to any person shall include its successors in title, permitted assigns and permitted transferees;

(iv) assets includes present and future properties, revenues and rights of every description;

(v) an authorisation includes any authorisation, consent, approval, resolution, licence, exemption, filing, notarisation or registration;

(vi) a regulation includes any regulation, rule, official directive, request or guideline (whether or not having the force of law) of any governmental, inter-governmental or supranational body, agency, department or regulatory, self-regulatory or other authority or organisation; and

(vii) any Programme Agreement or other document is a reference to that Programme Agreement or other document as amended, novated, restated, superseded or supplemented.

(b) The index to and the headings in this Agreement are for convenience only and are to be ignored in construing this Agreement.

2. ISSUE

2.1 Appointment of Dealers

The Issuer hereby appoints the Dealers with respect to the issue of Notes under this Agreement.

2.2 **The Uncommitted Programme**

The Issuer shall not be under any obligation to issue any Notes, and a Dealer shall not be under any obligation to subscribe for or procure the subscription for any Notes, until such time as an agreement for a Note Transaction has been reached between the Issuer and that Dealer.

2.3 **Issue of Notes**

(a) Subject to the terms of this Agreement, the Issuer may issue Notes to any of the Dealers from time to time at such prices and upon such terms as the Issuer and the relevant Dealer may agree. The Issuer acknowledges that the Dealers may resell Notes subscribed for by such Dealers.

(b) Each issue of Notes having the same Issue Date, Maturity Date, currency and yield and redemption basis will be represented by one or more Global Notes [or by Definitive Notes] having the aggregate principal amount of such issue as may be agreed between the Issuer and the relevant Dealer.

(c) The tenor of each Note shall not be less than [one/seven] day[s] nor greater than [364] days, with that tenor being calculated from (and including) the issue date to (but excluding) the maturity date of that Note.

(d) Global Notes and Definitive Notes (if any) shall be issued in the following denominations (or integral multiples thereof):

(i) for US$ Notes, US$500,000;

(ii) for euro Notes, €500,000;

(iii) for Sterling Notes, £100,000; or

(iv) for Yen Notes, Yen 100,000,000,

or such other conventionally accepted denominations in those currencies as may be agreed between the Issuer and the relevant Dealer from time to time, subject in each case to compliance with all applicable legal and regulatory requirements and provided that the equivalent of that denomination in Sterling is not less than £100,000.

(e) The aggregate amount of Notes outstanding at any time will not exceed the Maximum Amount. For the purposes of calculating the Maximum Amount of Notes issued under this Agreement, the principal amount of any outstanding Note denominated in any currency other than [CURRENCY] shall be taken as the [CURRENCY] Equivalent of such principal amount as at the Issue Date of the Notes then to be issued.

2.4 **Agreements for Note Transactions**

If the Issuer and any Dealer shall agree on the terms of the subscription for any Note by that Dealer (including agreement with respect to the issue date, aggregate principal or nominal amount, denomination, currency, price, redemption basis, maturity date and discount, interest basis or index-linking), then:

(a) the Issuer shall instruct the Agent to issue that Note and deliver it in accordance with the terms of the Agency Agreement;

(b) the relevant Dealer shall pay the subscription price of such Note on the issue date:

(i) in the case of a euro Note, by transfer of same-day funds settled through the Trans-European Automated Real-Time Gross Settlement Express Transfer (TARGET) System to such euro account as the Agent shall from time to time have specified for this purpose; or

(ii) in the case of a Sterling Note, by transfer of same-day funds to the Sterling account in London as the Agent shall from time to time have specified for this purpose; or

(iii) in the case of a Dollar Note, by transfer of funds settled through the New York Clearing House Interbank Payments System (or such other same-day value funds as at the time shall be customary for the settlement in New York City of international banking transactions denominated in Dollars) to the account in New York denominated in Dollars as the Agent shall from time to time have specified for this purpose; or

(iv) in all other cases, by transfer of freely transferable same-day funds in the relevant currency to the account of the Agent at such bank in the applicable jurisdiction for such currency as the Agent may from time to time have specified for this purpose; and

(c) the relevant Dealer shall notify the Agent and the Issuer of the payment and delivery instructions applicable to such Note in accordance with prevailing market practice and in sufficient time to enable the Agent to deliver such Note(s) (or make the same available for collection) on the relevant issue date.

2.5 **Failure to issue**

If, for any reason (including, without limitation, the failure of the relevant trade), a Note is not to be issued in accordance with a Note Transaction, the Issuer and the relevant Dealer shall immediately notify the Agent of that fact.

2.6 **Optional currencies**

Any agreement for a Note Transaction for a Note denominated in a currency other than Sterling, Dollars, euro or Yen shall be conditional upon:

(a) it being lawful and in compliance with all requirements of any relevant central bank and any other relevant fiscal, monetary, regulatory or other authority from time to time, for deposits to be made in such currency and for such Note to be issued, offered for sale, sold and delivered;

(b) such other currency being freely transferable and freely convertible into [CURRENCY];

(c) the consent of the Agent to that currency having been given; and

(d) any appropriate amendments which the relevant Dealer and/or the Issuer and/or the Agent shall require having been made to this Agreement and/or the Agency Agreement.

2.7 **Increase in Maximum Amount**

The Issuer may from time to time increase the Maximum Amount by:

(a) giving at least 10 days' notice by letter in substantially the form of Schedule 3 to each Dealer and to the Agent; and

(b) delivering to each Dealer with that letter the documents referred to in that letter, in each case in form and substance acceptable to each Dealer.

2.8 **Global Notes and Definitive Notes**

(a) Each Note issued will be represented initially by one or more Global Notes.

(b) Global Notes will be exchangeable, in accordance with their terms, for Definitive Notes denominated in that currency only upon default by the Issuer in the payment of any amount payable in respect of the Notes represented by such Global Notes or if any relevant Clearing System in which the relevant Global Note is held is closed for a continuous period of 14 days or more (other than by reason of weekends or public holidays, statutory or otherwise) or if any such Clearing System announces an intention to permanently cease to do business or does in fact.

3. REPRESENTATIONS AND WARRANTIES

3.1 **Representations and warranties**

Each of the Issuer (in respect of itself) and the Guarantor (in respect of each of itself and the Issuer) make the representations and warranties in this Clause 3 to each Dealer.

3.2 **Status**

Each of the Issuer and the Guarantor is a corporation duly incorporated and validly existing under the laws of its jurisdiction of incorporation and has the power to own its assets and carry on its business as it is being conducted.

3.3 **Powers and authority**

It has the power to enter into, perform and deliver, and has taken all necessary action to authorise the entry into, performance and delivery of, the Notes and the Programme Agreements to which it is a party and the transactions contemplated by those Notes and Programme Agreements.

3.4 **Binding obligations**

The obligations expressed to be assumed by it in each of the Programme Agreements to which it is a party and (when the Notes have been issued and delivered under the Agency Agreement and have been paid for) the Notes are, subject to any general principles of law limiting its obligations which are specifically referred to in any legal opinion delivered under Schedule 1, legal, valid, binding and enforceable obligations.

3.5 **Authorisations**

All authorisations required:

(a) to enable it lawfully to enter into, exercise its rights and comply with its obligations under, the Notes and Programme Agreements to which it is a party; and

(b) to make the Programme Agreements and Notes to which it is a party admissible in evidence in its jurisdiction of incorporation,

have been obtained or effected and are in full force and effect.

3.6 **Non-conflict**

The entry into, delivery and performance by the Issuer and the Guarantor of its obligations under the Notes and the Programme Agreements to which it is a party and the transactions contemplated by the Programme Agreements will not conflict with, or constitute a default under:

(a) the constitutional documents of the Issuer or the Guarantor; or

(b) any law or regulation applicable to the Issuer or the Guarantor; or

(c) any agreement or instrument by which the Issuer or the Guarantor or any of its respective assets are bound.

3.7 **Ranking**

The obligations of the Issuer and the Guarantor under the Programme Agreements to which it is a party and the Notes (when issued) rank at least *pari passu* with all present and future unsecured and unsubordinated obligations of the Issuer or the Guarantor, as the case may be, other than obligations mandatorily preferred by law applying to companies generally.

3.8 **Disclosure Documents**

(a) In the context of the Programme Agreements and the transactions contemplated by the Programme Agreements, the information contained or incorporated by reference in the Disclosure Documents is true and accurate in all material respects and not misleading in any material respect and there are no other facts in relation to the Issuer, the Guarantor or any Notes the omission of which makes the Disclosure Documents or any such information contained or incorporated by reference therein misleading in any material respect.

(b) [Any statements of intention, opinion, belief or expectation contained in the Disclosure Documents are, or will be at the date of its publication, honestly and reasonably made by the Issuer and the Guarantor.]

3.9 **Financial Information**

The most recently published financial statements of the Issuer and Guarantor which are incorporated by reference in the Information Memorandum:

(a) were prepared in accordance with the requirements of applicable law and with generally accepted accounting principles in the jurisdiction of incorporation of the Issuer, or Guarantor (as the case may be) and are consistently applied throughout the periods involved; and

(b) fairly represent its financial condition and operations (consolidated in the case of the Guarantor) as at the date to

which they were prepared.

3.10 **Adverse Change and Litigation**

Except as otherwise disclosed by any Disclosure Documents:

(a) there has been no adverse change in the business, financial or other condition or prospects of any member of the Group since the date of the most recently published audited [consolidated] financial statements of the [Issuer/Guarantor]; and

(b) there is no litigation, arbitration or administrative proceeding pending or, to the knowledge of the Issuer or the Guarantor, threatened against or affecting any member of the Group,

which in any case could reasonably be expected to be material in the context of the Programme Agreements and the transactions contemplated by the Programme Agreements.

3.11 **No Default**

No member of the Group is in default in respect of any indebtedness for borrowed money or any obligation having a similar commercial effect.

3.12 **No Withholding Tax**

Neither the Issuer nor the Guarantor is required by any law or regulation or any relevant taxing authority or any political subdivision or any authority thereof having the power to tax in the jurisdiction in which the Issuer or the Guarantor is resident for tax purposes to make any withholding or deduction from any payment due under the Notes or any Programme Agreement to which it is a party for or on account of any taxes or duties of whatever nature.

3.13 **Maximum Amount**

The aggregate outstanding principal amount of the Notes on the date of issue of any Note does not exceed the Maximum Amount.

3.14 [**United States Investment Company Act**

Neither the Issuer nor the Guarantor is, or as a result of any issue

of Notes or the receipt or application of the proceeds thereof will be, an investment company as defined in the United States Investment Company Act of 1940.]

3.15 **Times for making representations and warranties**

The representations and warranties set out in this Clause 3:

(a) are made on the date of this Agreement; and

(b) are deemed to be repeated on each date upon which the Maximum Amount is increased, each date a Note Transaction is agreed and each date upon which any Note is, or is to be, issued by reference to the facts and circumstances then existing.

When a representation or warranty under Clauses 3.8 (Disclosure Documents) and 3.10 (Adverse change and litigation) is repeated under paragraph (b) above, the reference to Disclosure Documents shall be deemed to be only the Disclosure Documents which have been published before the date on which a relevant Note Transaction is made (in the case of that Note Transaction and the corresponding issue of Notes) or the date on which the letter purporting to increase the Maximum Amount is delivered (in the case of that increase).

3.16 **Notice of inaccuracy**

If, before a Note is issued and delivered to or for the account of the relevant Dealer, an event occurs which would render any of the representations and warranties in this Clause 3 immediately, or with the lapse of time, untrue or incorrect, the Issuer will inform the relevant Dealer as soon as practicable of the occurrence of such event. In either case, the relevant Dealer shall inform the Issuer without any undue delay whether it wishes to continue or discontinue the issuance and delivery of the respective Notes.

4. CONDITIONS PRECEDENT

4.1 **Conditions precedent**

By a date no later than five Business Days before the date upon

which the Issuer and any Dealer shall first agree terms for a Note Transaction (or such other period as may be agreed between the Issuer and that Dealer), the Issuer shall deliver to that Dealer each of the documents listed in Schedule 1, in form and substance satisfactory to that Dealer.

4.2 **Further conditions precedent**

The obligations of any Dealer in respect of any agreement for a Note Transaction and each issue of Notes shall be conditional upon:

(a) the representations and warranties of the Issuer and the Guarantor contained in Clause 3 (Representations and warranties) being true and correct:

(i) on each date upon which an agreement for a Note Transaction is made; and

(ii) on each date on which Notes are issued,

by reference to the facts and circumstances then subsisting;

(b) there being no breach as at the issue date of those Notes in the performance of the obligations of the Issuer or the Guarantor under any of the Programme Agreements or any Note; and

(c) except as disclosed in any Disclosure Document issued before the date upon which an agreement for a Note Transaction is made, no Ratings Agency has in respect of any short-term debt securities of the [Issuer]/[Guarantor] issued any notice downgrading such securities or put any such rating on its "Creditwatch" list or other similar publication of formal review (including a notice confirming a change of outlook), in each case with negative implications.

5. COVENANTS AND AGREEMENTS

5.1 **Duration**

The undertakings in this Clause 5 remain in force from the date of this Agreement for so long as any Programme Agreement is in force and any amount is or may be outstanding under any

Programme Agreement or any Note.

5.2 **Financial information**

Whenever the Issuer or the Guarantor publishes or makes available to its shareholders (or any class of them) or to its creditors generally (or any class of them) or to the public (by filing with any regulatory authority, securities exchange or otherwise) any information which could reasonably be expected to be material in the context of the Programme Agreements and the Notes and the transactions contemplated by the Programme Agreements and the Notes, the Issuer or the Guarantor shall:

(a) notify each Dealer as to the nature of such information;

(b) make a reasonable number of copies of such information available to each Dealer upon request and permit distribution of that information to actual or potential purchasers of Notes; and

(c) take such action as may be necessary to ensure that the representation and warranty contained in Clause 3.8 (Disclosure Documents) is true and accurate on the dates when it is made or deemed to be repeated.

5.3 **Authorisation information**

Whenever the Issuer or the Guarantor is required to obtain or effect any authorisation in order to comply with the representation and warranty contained in Clause 3.5 (Authorisations), the Issuer or the Guarantor shall:

(a) notify each Dealer as to the nature of such authorisation; and

(b) upon request by a Dealer, make a reasonable number of copies of such authorisation available to that Dealer.

5.4 **Ratings**

The [Issuer][Guarantor] undertakes promptly to notify the Dealers of any change in the rating given by any Ratings Agency of the [Issuer's][Guarantor's] short-term debt securities or upon it becoming aware that such rating has been put on a "Creditwatch" list or other similar publication of formal review (including a

notice of change of outlook) by any Ratings Agency.

5.5 **Indemnification**

(a) The Issuer, failing which the Guarantor, will indemnify and hold harmless on demand each Relevant Party against any and all losses, claims, damages, liabilities or expenses (including, without limitation, costs of investigation and defence, legal fees and disbursements) to which that indemnified party may be subject arising out of or in connection with or based upon:

(i) the Issuer's failure to make due payment under the Notes or the Deed of Covenant; or

(ii) any Notes not being issued for any reason (other than as a result of the failure of any Dealer to pay for such Notes) after an agreement for that Note Transaction has been made; or

(iii) the Guarantor's failure to make due payment under the Guarantee; or

(iv) any breach or alleged breach of the representations, warranties, covenants or agreements made or deemed to be repeated by the Issuer or the Guarantor in this Agreement or any other Programme Agreement to which it is a party unless, in the case of an alleged breach only, the allegation is being made by that Relevant Party; or

(v) any untrue statement or alleged untrue statement of any material fact contained in the Disclosure Documents or the omission or alleged omission to state therein a material fact necessary in order to make the statements therein, in the light of the circumstances under which they were made, not misleading in any material respect unless, in the case of an alleged untrue statement, the allegation is being made by that Relevant Party.

(b) In case any allegation as described in sub-paragraphs (a)(iv) or (a)(v) above is made or any action is brought against any Relevant Party in respect of which recovery may be sought from the Issuer and/or the Guarantor, as the case may be, under this Clause 5.5, the Relevant Party shall promptly

notify the Issuer and the Guarantor (although failure to do so will not relieve the Issuer or the Guarantor from any liability under this Agreement). If any such allegation is made, the parties agree to consult in good faith with respect to the nature of the allegation. Subject to paragraph (c) below, the Issuer or, as the case may be, the Guarantor may participate at its own expense in the defence of any action.

(c) If it so elects within a reasonable time after receipt of the notice referred to in paragraph (b) above, the Issuer or, as the case may be, the Guarantor may assume the defence of the action with legal advisers chosen by it and approved by the Relevant Party (such approval not to be unreasonably withheld or delayed). Notwithstanding such election a Relevant Party may employ separate legal advisers reasonably acceptable to the Issuer and the Guarantor, and the Issuer or the Guarantor shall bear the reasonable fees and expenses of such separate legal advisers if:

(i) the use of the legal advisers chosen by the Issuer or the Guarantor to represent the Relevant Party would present such legal advisers with a conflict of interest;

(ii) the actual or potential defendants in, or targets of, any such action include both the Relevant Party and the Issuer or the Guarantor and the Relevant Party concludes that there may be legal defences available to it and/or other Relevant Parties which are different from or additional to those available to the Issuer or the Guarantor;

(iii) the Issuer or the Guarantor has not employed legal advisers reasonably satisfactory to the Relevant Party to represent the Relevant Party within a reasonable time after notice of the institution of such action; or

(iv) the Issuer or the Guarantor authorises the Relevant Party to employ separate legal advisers at the expense of the Issuer or the Guarantor.

(d) If the Issuer or, as the case may be, the Guarantor assumes the defence of the action, the Issuer or, as the case may be, the Guarantor shall not be liable for any fees and expenses

of legal advisers of the Relevant Party incurred thereafter in connection with the action, except as stated in paragraph (c) above.

(e) Neither the Issuer nor the Guarantor shall be liable in respect of any settlement of any action effected without its written consent, such consent not to be unreasonably withheld or delayed. Neither the Issuer nor the Guarantor shall, without the prior written consent of the Relevant Party (such consent not to be unreasonably withheld or delayed) settle or compromise or consent to the entry of any judgement with respect to any pending or threatened claim or action in respect of which recovery may be sought (whether or not any Relevant Party is an actual or potential party to such claim or action) unless such settlement, compromise or consent includes an unconditional release of each Relevant Party from all liability arising out of such claim or action and does not include a statement as to or an admission of fault, culpability or failure to act by or on behalf of a Relevant Party.

5.6 **Costs and expenses**

The Issuer, failing which the Guarantor, will:

(a) pay, or reimburse the Arranger for, all reasonable costs and expenses (including value added tax and any other taxes or duties and fees and disbursements of counsel to the Arranger) incurred by the Arranger in connection with the preparation, negotiation, printing, execution and delivery of the Programme Agreements and the Notes and all documents contemplated by the Programme Agreements and the Notes;

(b) pay, or reimburse each Dealer for, all costs and expenses (including value added tax and any other taxes or duties and fees and disbursements of counsel to such Dealer) incurred by that Dealer in connection with the enforcement or protection of its rights under the Programme Agreements, the Notes and all documents contemplated by the Programme Agreements and the Notes; and

(c) pay any stamp duty or other taxes (including any penalties and interest in respect thereof) payable in connection with

the entry into, delivery and performance of any Programme Agreement or any Notes, and will indemnify and hold harmless each Dealer on demand from all liabilities arising from any failure to pay or delay in paying such duty or taxes.

5.7 **Changes to the Programme**

(a) The Issuer, failing which the Guarantor, will notify each Dealer of:

(i) any change in an Agent, or any change in any of the offices of such Agent; and

(ii) any amendment to or termination of the Agency Agreement, the Deed of Covenant or the Guarantee,

by no later than 10 Business Days before the making of that change, amendment or termination.

(b) The Issuer and the Guarantor will not permit to become effective any change, amendment or termination to the Agency Agreement, Deed of Covenant or Guarantee which could reasonably be expected to adversely affect the interests of any Dealer or the holder of any Notes then outstanding.

5.8 **Continuing obligations**

The Issuer and the Guarantor will take such steps (in conjunction with the Dealers, where appropriate) to ensure that any laws and regulations or requirements of any governmental agency, authority or institution which may from time to time be applicable to any Notes shall be fully observed and complied with, including (without limitation) its obligations under Clauses 5.9 (US selling restrictions), 5.10 (Yen Notes) and 5.11 (United Kingdom).

5.9 **US selling restrictions**

Each of the Issuer and the Guarantor represents, warrants and agrees that neither it, nor any of its affiliates, nor any person acting on its behalf or on behalf of any of its affiliates, has engaged or will engage in any directed selling efforts in the United States with respect to any Notes, and that it and its affiliates have complied

and will comply with the offering restrictions requirement of Regulation S under the United States Securities Act of 1933, as amended [and the Issuer [and the Guarantor] both reasonably believe that there is no substantial US market interest in its debt securities]. [Each of the Issuer and the Guarantor agrees that it will not offer or sell, nor solicit offers to buy, securities under circumstances that would require registration of the Notes under the United States Securities Act of 1933, as amended.] Terms used in this Clause 5.9 have the meanings given to them by that Regulation S.

5.10 **Yen Notes**

(a) Subject to paragraph (b) below, the Issuer and the Guarantor will in respect of Yen Notes comply with any applicable laws, regulations and guidelines of Japanese governmental and regulatory authorities relevant in the context of the issue of Yen Notes, as amended from time to time, and shall submit (or procure the submission on its behalf of) such reports or information as may be required for compliance with such laws, regulations and guidelines from time to time.

(b) Yen Notes may be offered or sold in circumstances which would not be so permissible at the date of this Agreement if permitted by any change or amendment which is made after the date of this Agreement in such rules, regulations and guidelines or in such laws or directives as are applicable to Yen Notes from time to time.

5.11 **United Kingdom**

The Issuer will issue Notes under the Programme only if the following conditions apply (or the Notes can otherwise be issued without contravention of Section 19 of the FSMA):

(a) the relevant Dealer covenants in the terms set out in paragraph 3(a) of Schedule 2; and

(b) the redemption value of each Note is not less than £100,000 (or an amount of equivalent value denominated wholly or partly in a currency other than Sterling), and no part of

any Note may be transferred unless the redemption value of that part is not less than £100,000 (or such an equivalent amount).

[NB – amend if the Issuer is an authorised/ exempt person.]

6. OBLIGATIONS OF THE DEALERS

6.1 Selling restrictions

Each Dealer represents, covenants and agrees that it has complied and will comply with the selling restrictions set out in Schedule 2. Subject to those restrictions, each Dealer is authorised by the Issuer and the Guarantor to circulate the Disclosure Documents to actual or potential purchasers of Notes.

6.2 Obligations several

The obligations of each Dealer under this Agreement are several.

7. TERMINATION AND APPOINTMENT

7.1 Termination

(a) The Issuer may terminate the appointment of any Dealer on not less than 30 days' written notice to the relevant Dealer. The Dealer may resign on not less than 30 days' notice to the Issuer. The Issuer shall promptly inform the other Dealers and the Agent of such termination or resignation.

(b) The rights and obligations of each party to this Agreement shall not terminate in respect of any rights or obligations accrued or incurred before the date on which such termination takes effect and the provisions of Clauses 5.5 (Indemnification) and 5.6 (Costs and expenses) shall survive termination of this Agreement and delivery against payment for any of the Notes.

7.2 Appointment of Dealers

(a) The Issuer may appoint one or more Additional Dealers upon the terms of this Agreement by sending a dealer accession letter to the Additional Dealer substantially in

the form of Schedule 4. The appointment will only become effective if the Additional Dealer confirms acceptance of its appointment to the Issuer by signing that dealer accession letter and delivering it to the Issuer. The Issuer may limit that appointment to a particular issue of Notes or for a particular period of time (which need not be a finite period of time).

(b) The Additional Dealer shall become a party to this Agreement on the later of:

(i) the date of the signature of the dealer accession letter by the Additional Dealer in accordance with paragraph (a) above; and

(ii) the date specified in the dealer accession letter as the date of appointment,

and the Additional Dealer shall then be vested with all the authority, rights, powers, duties and obligations as if originally named as a Dealer under this Agreement.

(c) If the appointment of that Additional Dealer is limited to a particular issue of Notes or period of time:

(i) such authority, rights, powers, duties and obligations shall extend to the relevant Notes or period only; and

(ii) following the relevant issue of Notes or the expiry of the time period, the relevant Additional Dealer shall have no further authority, rights, powers, duties or obligations except such as may have accrued or been incurred prior to, or in connection with, the issue of such Notes or during that time period.

(d) The Issuer shall promptly notify the Agent of any appointment. If the appointment of the Dealer is not limited to a particular issue of Notes or for a particular period of time, the Issuer shall also notify the other Dealers of that appointment. The Issuer agrees to supply to such Additional Dealer, upon appointment, a copy of the conditions precedent documents specified in Schedule 1, if requested by the Additional Dealer.

7.3 **Transfers to affiliates**

If, at any time, a Dealer transfers all or substantially all of its euro commercial paper business to any of its affiliates then, on the date that transfer becomes effective, the relevant affiliate shall become the successor to that Dealer under this Agreement without the execution or filing of any paper or any further act on the part of the parties to this Agreement. Upon that transfer becoming effective, all references in this Agreement to the relevant Dealer shall be deemed to be references to the relevant affiliate. The relevant Dealer shall, promptly following that effective date, give notice of the transfer to the Issuer with a copy to the Agent.

8. CALCULATION AGENT

(a) If Index Linked Notes are to be issued, the Issuer will, at its discretion, appoint either the relevant Dealer or the Agent or any other person to be the Calculation Agent in respect of such Index Linked Notes. The prior consent of that Dealer Agent or other person is required for this appointment.

(b) If a Dealer has agreed to be the Calculation Agent, its appointment as such shall be on the terms of the form of agreement set out in Schedule 5, and that Dealer will be deemed to have entered into an agreement in that form for a particular calculation if it is named as Calculation Agent in the redemption calculation attached to or endorsed on the relevant Note.

(c) If the Agent has agreed to be the Calculation Agent, its appointment shall be on the terms set out in the Agency Agreement.

(d) If the person who has agreed to act as Calculation Agent is not a Dealer or the Agent, that person shall execute (if it has not already done so) an agreement substantially in the form of the agreement set out in Schedule 5.

9. STATUS OF THE DEALERS AND THE ARRANGER

The Arranger shall have only those duties, obligations and responsibilities expressly specified in this Agreement. Each of the Dealers agrees that the Arranger has only acted in an administrative capacity to facilitate

the establishment and/or maintenance of the Programme and has no responsibility to it for:

(a) the adequacy, accuracy, completeness or reasonableness of any representation, warranty, undertaking, agreement, statement or information in the Information Memorandum, this Agreement or any information provided by it in connection with the Programme; or

(b) the nature and suitability to it of all legal, tax and accounting matters and all documentation in connection with the Programme or any Notes.

10. NOTICES

10.1 Written Communication

Any communication to be made under this Agreement shall be made in writing and, unless otherwise agreed, be made by fax, letter [or by telephone (to be confirmed promptly by fax or letter)].

10.2 Delivery

(a) Any communication by letter shall be made to the intended recipient and marked for the attention of the person, or any one of them, at its relevant address and shall be deemed to have been made [upon delivery/when it has been left at that address or [ ] Business Days after being deposited in the post in a correctly addressed and postage prepaid envelope].

(b) Any communication to be made by fax shall be made to the intended recipient and marked for the attention of the person, or any one of them, at its relevant fax number and shall be deemed to have been received when that fax communication has been received by the intended recipient in legible form.

(c) [Any communication to be made by telephone shall be made to the intended recipient at the relevant telephone number from time to time designated by that party to the other parties for the purpose of this Agreement and shall be deemed to have been received when made provided that prompt confirmation

of that communication is given by fax or letter.]

10.3 **Contact details**

For purposes of Clause 10.2 (Delivery), the relevant contact details of each party to this Agreement shall be as set out in the signatory pages to this Agreement, or as otherwise notified by any party to each other party to this Agreement.

10.4 **Receipt**

(a) A communication given under this Agreement but received on a non-Business Day or after business hours in the place of receipt will only be deemed to be given on the next Business Day in that place.

(b) [A communication under this Agreement to a Dealer will only be effective on actual receipt by that Dealer.]

10.5 **Language**

(a) Any notice given in connection with a Programme Agreement or Note must be in English.

(b) Any other document provided in connection with a Programme Agreement or Note must be:

(i) in English; or

(ii) if not in English, (unless the Dealers otherwise agree) accompanied by a certified English translation. In this case, the English translation prevails unless the document is a constitutional, statutory or other official document.

10.6 **[Electronic communication**

(a) Any communication to be made between parties to this Agreement under or in connection with the Programme Agreements may be made by electronic mail or other electronic means if the relevant parties:

(i) agree that, unless and until notified to the contrary, this is to be an accepted form of communication;

(ii) notify each other in writing of their electronic mail address and/or any other information required to enable the sending and receipt of information by that means; and

(iii) notify each other of any change to their address or any other such information supplied by them.

(b) Any electronic communication made between those parties will be effective only when actually received in readable form at the correct address.]

11. PARTIAL INVALIDITY

If, at any time, any provision of this Agreement is or becomes illegal, invalid or unenforceable in any respect under any law of any jurisdiction, neither the legality, validity or enforceability of the remaining provisions nor the legality, validity or enforceability of such provision under the law of any other jurisdiction will in any way be affected or impaired.

12. REMEDIES AND WAIVERS

No failure to exercise, nor any delay in exercising, on the part of any Dealer, any right or remedy under the Programme Agreements shall operate as a waiver, nor shall any single or partial exercise of any right or remedy prevent any further or other exercise or the exercise of any other right or remedy. The rights and remedies provided in this Agreement are cumulative and not exclusive of any rights or remedies provided by law.

13. COUNTERPARTS

This Agreement may be executed in any number of counterparts. This has the same effect as if the signatures on the counterparts were on a single copy of this Agreement.

14. RIGHTS OF THIRD PARTIES

A person who is not a party to this Agreement has no right under the Contracts (Rights of Third Parties) Act 1999 to enforce or enjoy the benefit of any term of this Agreement, but this does not affect any right or remedy of a third party which exists or is available apart from that Act.

15. GOVERNING LAW

This Agreement, any agreement for a Note Transaction and the Notes shall be governed by, and construed in accordance with, English law.

16. ENFORCEMENT

16.1 **Jurisdiction**

(a) The English courts have exclusive jurisdiction to settle any dispute arising out of or in connection with this Agreement (including a dispute regarding the existence, validity or termination of this Agreement).

(b) The parties to this Agreement agree that the English courts are the most appropriate and convenient courts to settle any such dispute and accordingly no such party will argue to the contrary.

(c) This Clause 16 is for the benefit of the Dealers only. To the extent allowed by law, a Dealer may take:

(i) proceedings in any other court with jurisdiction; and

(ii) concurrent proceedings in any number of jurisdictions.

16.2 **Service of process**

(a) The Issuer and the Guarantor (in each case, if not incorporated in England and Wales) irrevocably appoints [ ] at [specify address] as its agent for service of process in any proceedings before the English courts in connection with any Programme Agreement.

(b) If any person appointed as process agent is unable for any reason to act as agent for service of process, the Issuer or the Guarantor (as the case may be) must immediately appoint another agent on terms acceptable to the Dealers. Failing this, the Dealers may appoint another agent for this purpose.

(c) The Issuer and the Guarantor each agrees that failure by a process agent to notify it of any process will not invalidate the relevant proceedings.

(d) This Clause 16 does not affect any other method of service allowed by law.

16.3 **Waiver of immunity**

The Issuer and the Guarantor each irrevocably and unconditionally:

(a) agrees not to claim any immunity from proceedings brought by a Dealer against it in relation to a Programme Agreement or Note and to ensure that no such claim is made on its behalf;

(b) consents generally to the giving of any relief or the issue of any process in connection with those proceedings; and

(c) waives all rights of immunity in respect of it or its assets.

16.4 [**Waiver of trial by jury**

EACH PARTY WAIVES ANY RIGHT IT MAY HAVE TO A JURY TRIAL OF ANY CLAIM OR CAUSE OF ACTION IN CONNECTION WITH ANY PROGRAMME AGREEMENT OR NOTE OR ANY TRANSACTION CONTEMPLATED BY ANY PROGRAMME AGREEMENT. THIS AGREEMENT MAY BE FILED AS A WRITTEN CONSENT TO TRIAL BY COURT.] [*Use if US Issuer or Guarantor involved*]

This Agreement has been entered into on the date stated at the beginning of this Agreement.

SCHEDULE 1

CONDITION PRECEDENT DOCUMENTS

1. Certified copies of the Issuer's and the Guarantor's constitutional documents.

2. Certified copies of all documents evidencing the internal authorisations required to be granted by the Issuer and the Guarantor:

(a) approving the terms of, and the transactions contemplated by, the Notes and Programme Agreements to which it is a party and resolving that it execute the Notes and Programme Agreements to which it is a party;

(b) authorising a specified person or persons to execute the Notes and Programme Agreements to which it is a party on its behalf; and

(c) authorising a specified person, or persons on its behalf, to sign and/or despatch all documents and notices to be signed and/or despatched by it under or in connection with Notes and Programme Agreements to which it is a party.

3. Certified copies of any governmental or other consents required for the issue of Notes and for the Issuer and the Guarantor to enter into, deliver and perform its obligations under the Notes and the Programme Agreements (as applicable).

4. Conformed copies of:

(a) this Agreement, as executed;

(b) the Agency Agreement, as executed;

(c) the Deed of Covenant, as executed; and

(d) the Guarantee, as executed.

5. A copy of:

(a) the confirmation from the Agent that a duly executed engrossment of each of the Deed of Covenant and the Guarantee has been delivered to the Agent;

(b) the confirmation from the Agent that the [relevant forms of Definitive Note have been security printed (if required by the Issuer), the] relevant forms of Global Note have been prepared and have been delivered to the Agent; and

(c) the confirmation of acceptance of appointment from the agent for service of process.

6. A legal opinion from:

(a) [legal adviser(s) acceptable to the Dealers qualified in the law of the jurisdiction of incorporation of the [Issuer and the Guarantor]; and]

(b) [•], English legal advisers to the Dealers.

7. The Information Memorandum.

8. A list of the names and titles and specimen signatures of the persons authorised:

(a) to sign on behalf of the Issuer and the Guarantor (as applicable) the Notes and the Programme Agreements to which it is a party;

(b) to sign on behalf of the Issuer and the Guarantor all notices and other documents to be delivered in connection with the Programme Agreements and the Notes; and

(c) to take any other action on behalf of the Issuer and the Guarantor in relation to the euro-commercial paper programme established by the Programme Agreements.

9. Confirmation that ratings of [ ] have been granted by S&P and Moody's respectively for the Programme.

SCHEDULE 2

SELLING RESTRICTIONS

1. General

Each Dealer represents, warrants and agrees that it will observe all applicable laws and regulations in any jurisdiction in which it may offer, sell, or deliver Notes and it will not directly or indirectly offer, sell, resell, re-offer or deliver Notes or distribute any Disclosure Document, circular, advertisement or other offering material in any country or jurisdiction except under circumstances that will result, to the best of its knowledge and belief, in compliance with all applicable laws and regulations.

2. United States of America

The Notes and the Guarantee have not been and will not be registered under the United States Securities Act of 1933, as amended (the "**Securities Act**") and the Notes and the Guarantee, if applicable, may not be offered or sold within the United States or to, or for the account or benefit of, US persons. Each Dealer represents and agrees that it has offered and sold, and will offer and sell, Notes and the Guarantee only outside the United States to non-US persons in accordance with Rule 903 of Regulation S under the Securities Act ("**Regulation S**"). Accordingly, each Dealer represents and agrees that neither it, nor its affiliates nor any person acting on its or their behalf has engaged or will engage in any directed selling efforts with respect to the Notes and the Guarantee, and that it and they have complied and will comply with the offering restrictions requirement of Regulation S. Each Dealer also agrees that, at or prior to confirmation of sale of Notes and the Guarantee, it will have sent to each distributor, dealer or person receiving a selling commission, fee or other remuneration that purchases Notes from it a confirmation or notice to substantially the following effect:

"The Securities covered hereby have not been registered under the United States Securities Act of 1933, as amended (the "**Securities Act**") and may not be offered or sold within the United States or to, or for the account or benefit of, US persons. Terms used above have the meanings given to them by Regulation S under the Securities Act."

Terms used in this paragraph have the meanings given to them by Regulation S.

3. The United Kingdom

Each Dealer represents, warrants and agrees that:

(a) (i) it is a person whose ordinary activities involve it in acquiring, holding, managing or disposing of investments (as principal or agent) for the purposes of its business; and

(ii) it has not offered or sold and will not offer or sell any Notes other than to persons whose ordinary activities involve them in acquiring, holding, managing or disposing of investments (as principal or agent) for the purposes of their businesses or who it is reasonable to expect will acquire, hold, manage or dispose of investments (as principal or agent) for the purposes of their businesses where the issue of the Notes would otherwise constitute a contravention of Section 19 of the Financial Services and Markets Act 2000 (the "**FSMA**") by the Issuer;

(b) it has only communicated or caused to be communicated and will only communicate or cause to be communicated any invitation or inducement to engage in investment activity (within the meaning of Section 21 of the FSMA) received by it in connection with the issue or sale of any Notes in circumstances in which section 21(1) of the FSMA [does not apply to the Issuer]/[does not, or in the case of the Issuer would not if it were not an "**authorised person**", apply to the Issuer]; and

(c) it has complied and will comply with all applicable provisions of the FSMA with respect to anything done by it in relation to such Notes in, from or otherwise involving the United Kingdom.

4. Japan

Each Dealer acknowledges that the Notes have not been and will not be registered under the Securities and Exchange Law of Japan (the "**Securities and Exchange Law**") and, accordingly, each Dealer undertakes that it will not offer or sell any Notes, directly or indirectly, in Japan or to, or for the benefit of, any Japanese Person or to others for re-offering or resale,

directly or indirectly, in Japan or to any Japanese Person, except pursuant to an exemption from the registration requirements of, and otherwise in compliance with, the Securities and Exchange Law and any other applicable laws, regulations and guidelines promulgated by the relevant Japanese governmental and regulatory authorities and in effect at the relevant time. For these purposes "**Japanese Person**" means any person resident in Japan, including any corporation or other entity organised under the laws of Japan.

SCHEDULE 3

NOTIFICATION LETTER FOR AN INCREASE IN THE MAXIMUM AMOUNT

[Letterhead of Issuer]
To: The Dealers referred to below
cc. [ ] (as "**Agent**")
cc. [ ] (as "**Arranger**")
[Date]

Dear Sirs

[AMOUNT] euro-commercial paper programme

We refer to a dealer agreement dated [DATE] (the "**Dealer Agreement**") between ourselves as Issuer, [GUARANTOR] as Guarantor, [DEALERS] as Dealers and the Arranger relating to a [AMOUNT] euro-commercial paper programme. Terms used in the Dealer Agreement shall have the same meaning in this letter.

In accordance with Clause 2.7 (Increase in Maximum Amount) of the Dealer Agreement, we hereby notify each of the addressees listed above that the Maximum Amount is to be increased from [000,000,000] to [000,000,000] with effect from [ ], subject to delivery to the Dealers, the Arranger and the Agent of the following documents:

(a) a certificate from a duly authorised officer of the Issuer and the Guarantor confirming that no changes have been made to the constitutional documents of the Issuer or the Guarantor since the date of the Dealer Agreement or, if there has been a change, a certified copy of the constitutional documents currently in force;

(b) certified copies of all documents evidencing the internal authorisations and approvals required to be granted by the Issuer and the Guarantor for such an increase in the Maximum Amount;

(c) certified copies of [specify any applicable governmental or other consents required by the Issuer/Guarantor in relation to the increase];

(d) a list of names, titles and specimen signatures of the persons authorised to sign on behalf of the Issuer and the Guarantor all notices and other documents to be delivered in connection with such an increase in the Maximum Amount;

(e) [an updated or supplemental Information Memorandum reflecting the increase in the Maximum Amount of the Programme;]

(f) legal opinions from [Dealers' English law counsel and legal counsel in jurisdiction of the Issuer/Guarantor]; and

(g) confirmation that Standard & Poor's Rating Services and Moody's Investors Service, Inc. are maintaining their current ratings for the Programme.

Yours faithfully,

.....
for and on behalf of
[ISSUER]

SCHEDULE 4

DEALER ACCESSION LETTER

[Letterhead of Issuer]
[Date]
To: [Name of Dealer]
cc.: [list all permanent Dealers]
cc.: [AGENT] as Agent

Dear Sirs

[AMOUNT] euro-commercial paper programme

We refer to a dealer agreement dated [DATE] (the "**Dealer Agreement**") between ourselves as Issuer, [GUARANTOR] as Guarantor, [ARRANGER] as Arranger, [DEALERS] as Dealers relating to a [AMOUNT] euro-commercial paper programme. Terms used in the Dealer Agreement shall have the same meaning in this letter.

In accordance with Clause 7.2 (Appointment of Dealers) of the Dealer Agreement, we hereby appoint you as an Additional Dealer for the Programme upon the terms of the Dealer Agreement with [immediate effect/effect from [ ]][for • issue of Notes/for the period • to •]. [Copies of each of the condition precedent documents set out in Schedule 1 to the Dealer Agreement have been sent to you, as requested].

Please confirm acceptance of your appointment upon such terms by signing and returning to us the enclosed copy of this letter, whereupon you will, in accordance with Clause 7.2 (Appointment of Dealers) of the Dealer Agreement, become a party to the Dealer Agreement vested with all the authority, rights, powers, duties and obligations set out in that Clause 7.2.

Yours faithfully

.....
for and on behalf of
[ISSUER]

We hereby confirm acceptance of our appointment as a Dealer upon the terms of the Dealer Agreement referred to above. For the purposes of Clause 10 (Notices) of the Dealer Agreement our contact details are as follows:

[NAME OF DEALER]
Address: [ ]
Telephone: [ ]
Fax: [ ]
Contact: [ ]

Dated: .....

Signed: .....
for [Name of new Dealer]

SCHEDULE 5

FORM OF CALCULATION AGENCY AGREEMENT

THIS AGREEMENT is made on [•]

BETWEEN:

(1) [**ISSUER**] as issuer (the "**Issuer**");

(2) [**GUARANTOR**] as guarantor (the "**Guarantor**"); and

(3) [**CALCULATION AGENT**], as the Calculation Agent appointed pursuant to the terms hereof (the "**Calculation Agent**", which expression shall include any successor thereto).

WHEREAS:

(A) Under a dealer agreement (as amended, supplemented and/or restated from time to time, the "**Dealer Agreement**") dated [•] and made between, among others, the Issuer and the Dealer(s) referred to therein, and an issue and paying agency agreement (as amended, supplemented and/or restated from time to time, the "**Agency Agreement**") dated [•] and made between, among others, the Issuer and the agent[s] referred to therein, the Issuer established a euro-commercial paper programme (the "**Programme**").

(B) The Dealer Agreement contemplates, *inter alia*, the issue under the Programme of [floating rate notes and] index linked notes and provides for the appointment of calculation agents in relation thereto. Each such calculation agent's appointment shall be on substantially the terms and subject to the conditions of this Agreement.

IT IS AGREED as follows:

1. INTERPRETATION

(a) Terms not expressly defined herein shall have the meanings given to them in the Dealer Agreement or the Agency Agreement.

(b) Any reference in this Agreement to a statute, any provision thereof or to any statutory instrument, order or regulation made thereunder shall be construed as a reference to such statute, provision, statutory instrument, order or regulation as the same may have been, or may from time to time be, amended or re-enacted.

(c) "**Relevant [Index Linked] Notes**" means such [floating rate notes or] Index Linked Notes in respect of which the Calculation Agent is appointed.

2. APPOINTMENT OF CALCULATION AGENT

The Issuer appoints the Calculation Agent as its agent for the purpose of calculating the redemption amount and/or, if applicable, the amount of interest in respect of the Relevant [Index Linked] Notes upon the terms and subject to the conditions of this Agreement. The Calculation Agent accepts such appointment.

3. DETERMINATION AND NOTIFICATION

(a) The Calculation Agent shall determine the redemption amount of, and/or, if applicable, the amount of interest payable on, each Relevant [Index Linked] Note in accordance with the redemption calculation applicable thereto.

(b) The Calculation Agent shall as soon as it has made its determination as provided for in paragraph (a) above (and, in any event, no later than the close of business on the date on which the determination is made) notify the Issuer and the Agent (if other than the Calculation Agent) of the redemption amount and/or, if applicable, the amount of interest so payable.

4. STAMP DUTIES

The Issuer will pay any stamp, registration and other taxes and duties (including any interest and penalties thereon or in connection therewith) payable in connection with the execution, delivery and performance of this Agreement.

5. INDEMNITY AND LIABILITY

(a) The Issuer shall indemnify and hold harmless on demand the Calculation Agent against any claim, demand, action, liability, damages, cost, loss or expense (including, without limitation, legal fees and any applicable value added tax) which it may incur arising out of, in connection with or based upon the exercise of its powers and duties as Calculation Agent under this Agreement, except such as may result from its own negligence, default or bad faith or that of its officers, employees or agents.

(b) The Calculation Agent shall indemnify and hold harmless on demand the Issuer against any claim, demand, action, liability, damages, cost, loss or expense (including, without limitation, legal fees and any applicable United Kingdom value added tax) which it may incur or which may be made against the Issuer as a result of or in connection with the appointment or the exercise of the powers and duties of the Calculation Agent under this Agreement resulting from the negligence, default or bad faith of the Calculation Agent or that of its officers, employees or agents.

(c) The Calculation Agent may, after prior written notice to the Issuer, consult as to legal matters with lawyers selected by it, who may be employees of, or lawyers to, the Issuer. If such consultation is made, the Calculation Agent shall be protected and shall incur no liability for action taken or not taken by it as Calculation Agent or suffered to be taken with respect to such matters in good faith (after consultation with the Issuer), without negligence and in accordance with the opinion of such lawyers, as addressed to both parties.

6. CONDITIONS OF APPOINTMENT

The Calculation Agent and the Issuer agree that its appointment will be subject to the following conditions:

(a) in acting under this Agreement, the Calculation Agent shall act as an independent expert and shall not assume any obligations towards or relationship of agency or trust for the Issuer or the owner or holder of any of the Relevant [Index Linked] Notes or any interest therein;

(b) unless otherwise specifically provided in this Agreement, any order, certificate, notice, request, direction or other communication from the Issuer made or given under any provision of this Agreement shall be sufficient if signed or purported to be signed by a duly authorised employee of the Issuer;

(c) the Calculation Agent shall be obliged to perform only those duties which are set out in this Agreement and in the redemption calculation relating to the Relevant [Index Linked] Notes;

(d) the Calculation Agent and its officers and employees, in its individual or any other capacity, may become the owner of, or acquire any interest in, any Relevant [Index Linked] Notes with the same rights that the Calculation Agent would have if it were not the Calculation Agent hereunder; and

(e) all calculations and determinations made pursuant to this Agreement by the Calculation Agent shall (save in the case of manifest error) be binding on the Issuer, the Calculation Agent and (if other than the Calculation Agent) the holder(s) of the Relevant [Index Linked] Notes and no liability to such holder(s) shall attach to the Calculation Agent in connection with the exercise by the Calculation Agent of its powers, duties or discretion under or in respect of the Relevant [Index Linked] Notes in accordance with the provisions of this Agreement.

7. ALTERNATIVE APPOINTMENT

If, for any reason, the Calculation Agent ceases to act as such or fails to comply with its obligations under Clause 3, the Issuer shall appoint the Agent as Calculation Agent in respect of the Relevant [Index Linked] Notes.

8. CONTRACTS (RIGHTS OF THIRD PARTIES) ACT 1999

A person who is not a party to this Agreement has no right under the Contracts (Rights of Third Parties) Act 1999 to enforce any term of this Agreement, but this does not affect any right or remedy of any person which exists or is available apart from that Act.

9. GOVERNING LAW

This Agreement and every agreement for the issue and purchase of Notes shall be governed by, and construed in accordance with, English law.

10. JURISDICTION

(a) The English courts have exclusive jurisdiction to settle any dispute arising out of or in connection with this Agreement (including a dispute regarding the existence, validity or termination of this Agreement).

(b) The parties to this Agreement agree that the English courts are the most appropriate and convenient courts to settle any such dispute and accordingly no such party will argue to the contrary.

(c) This Clause is for the benefit of the Calculation Agent only. To the extent allowed by law, the Calculation Agent may take:

(i) proceedings in any other court with jurisdiction; and

(ii) concurrent proceedings in any number of jurisdictions.

11. SERVICE OF PROCESS

(a) The Issuer (if not incorporated in England and Wales) irrevocably appoints [ ] as its agent under this Agreement for service of process in any proceedings before the English courts in connection with this Agreement.

(b) If any person appointed as process agent is unable for any reason to act as agent for service of process, the Issuer must immediately appoint another agent on terms acceptable to the Calculation Agent. Failing this, the Calculation Agent may appoint another agent for this purpose.

(c) The Issuer agrees that failure by a process agent to notify it of any process will not invalidate the relevant proceedings.

(d) This Clause does not affect any other method of service allowed by law.

12. PARTIAL INVALIDITY

If, at any time, any provision of this Agreement is or becomes illegal, invalid or unenforceable in any respect under any law of any jurisdiction, neither the legality, validity or enforceability of the remaining provisions nor the legality, validity or enforceability of such provision under the law of any other jurisdiction will in any way be affected or impaired.

13. COUNTERPARTS

This Agreement may be signed in any number of counterparts. This has the same effect as if the signatures on the counterpart were on a single copy of this Agreement.

This Agreement has been entered into on the date stated at the beginning of this Agreement.

[**ISSUER**]
By: .....

[**GUARANTOR**]
By: ……..

[NAME OF CALCULATION AGENT]
By: .....

SCHEDULE 6

SIGNATORIES

THE ISSUER

[ISSUER]
By: ……..
Address: [ ]
Telephone: [ ]
Fax: [ ]
Contact: [ ]

THE GUARANTOR

[GUARANTOR]
By: ……..
Address: [ ]
Telephone: [ ]
Fax: [ ]
Contact: [ ]

THE ARRANGER

[ARRANGER]
By: ……..
Address: [ ]
Telephone: [ ]
Fax: [ ]
Contact: [ ]

THE DEALERS

[DEALERS]
By: ……..
Address: [ ]
Telephone: [ ]
Fax: [ ]
Contact: [ ]

ICMA STANDARD FORM ECP DOCUMENTATION

INFORMATION MEMORANDUM DATED [•]

[LOGO]

[ISSUER'S NAME]

[guaranteed by]
[GUARANTOR'S NAME]

[US$]/[€][•],000,000

EURO-COMMERCIAL PAPER PROGRAMME

Arranger
[•]

Dealers
[•]

IMPORTANT NOTICE

This Information Memorandum (together with any supplementary information memorandum and information incorporated herein by reference, the "**Information Memorandum**") contains summary information provided by [•] (the "**Issuer**")[and [•] (the "**Guarantor**")] in connection with a euro-commercial paper programme (the "**Programme**") under which the Issuer may issue and have outstanding at any time euro-commercial paper notes (the "**Notes**") up to a maximum aggregate amount of [US$]/[€][•],000,000 or its equivalent in alternative currencies. Under the Programme, the Issuer may issue Notes outside the United States pursuant to Regulation S ("**Regulation S**") of the United States Securities Act of 1933, as amended (the "**Securities Act**") [which will have the benefit of a deed of guarantee dated [•] and entered into by the Guarantor (the "**Guarantee**")]. The Issuer [and the Guarantor] [has]/[have], pursuant to a dealer agreement dated [•] (the "**Dealer Agreement**"), appointed [•] as arranger for the Programme (the "**Arranger**"), appointed [*Names of Dealers*] as dealers for the Notes (the "**Dealers**") and authorised and requested the Dealers to circulate the Information Memorandum in connection with the Programme on their behalf to purchasers or potential purchasers of the Notes.

The Issuer [and the Guarantor] [has]/[have] confirmed to the Arranger and the Dealers that the information contained or incorporated by reference in the Information Memorandum is true and accurate in all material respects and not misleading and that there are no other facts the omission of which makes the Information Memorandum as a whole or any such information contained or incorporated by reference therein misleading.

Neither the Issuer[, the Guarantor], the Arranger nor the Dealers accept any responsibility, express or implied, for updating the Information Memorandum and neither the delivery of the Information Memorandum nor any offer or sale made on the basis of the information in the Information Memorandum shall under any circumstances create any implication that the Information Memorandum is accurate at any time subsequent to the date thereof with respect to the Issuer [or the Guarantor] or that there has been no change in the business, financial condition or affairs of the Issuer [or the Guarantor] since the date thereof.

No person is authorised by the Issuer [or the Guarantor] to give any information or to make any representation not contained in the Information Memorandum and any information or representation not contained therein must not be relied upon as having been authorised.

Neither the Arranger nor any Dealer has independently verified the information contained in the Information Memorandum. Accordingly, no representation or warranty or undertaking (express or implied) is made, and no responsibility or liability is accepted by the Arranger or the Dealers as to the authenticity, origin, validity, accuracy or completeness of, or any errors in or omissions from, any information or statement contained in the Information Memorandum or in or from any accompanying or subsequent material or presentation.

The information contained in the Information Memorandum is not and should not be construed as a recommendation by the Arranger, the Dealers, the Issuer [or the Guarantor] that any recipient should purchase Notes. Each such recipient must make and shall be deemed to have made its own independent assessment and investigation of the financial condition, affairs and creditworthiness of the Issuer [and the Guarantor] and of the Programme as it may deem necessary and must base any investment decision upon such independent assessment and investigation and not on the Information Memorandum.

Neither the Arranger nor any Dealer undertakes to review the business or financial condition or affairs of the Issuer [or the Guarantor] during the life of the Programme, nor undertakes to advise any recipient of the Information Memorandum of any information or change in such information coming to the Arranger's or any Dealer's attention.

Neither the Arranger nor any of the Dealers accepts any liability in relation to this Information Memorandum or its distribution by any other person. This Information Memorandum does not, and is not intended to, constitute an offer or invitation to any person to purchase Notes. The distribution of this Information Memorandum and the offering for sale of Notes or any interest in such Notes or any rights in respect of such Notes, in certain jurisdictions, may be restricted by law. Persons obtaining this Information Memorandum or any Notes or any interest in such Notes or any rights in respect of such Notes are required by the Issuer,[the

Guarantor,] the Arranger and the Dealers to inform themselves about and to observe any such restrictions. In particular, but without limitation, such persons are required to comply with the restrictions on offers or sales of Notes and on distribution of this Information Memorandum and other information in relation to the Notes, the Issuer [and the Guarantor] set out under "**Selling Restrictions**" below.

THE NOTES [AND THE GUARANTEE] [HAS]/[HAVE] NOT BEEN AND WILL NOT BE REGISTERED UNDER THE SECURITIES ACT AND, SUBJECT TO CERTAIN EXCEPTIONS, MAY NOT BE OFFERED, SOLD OR DELIVERED WITHIN THE UNITED STATES OR TO, OR FOR THE ACCOUNT OR BENEFIT OF, US PERSONS (AS DEFINED IN REGULATION S).

No application will be made at any time to list the Notes on any stock exchange. A communication of an invitation or inducement to engage in investment activity (within the meaning of Section 21 of the Financial Services and Markets Act 2000 (the "**FSMA**")) received in connection with the issue or sale of any Notes will only be made in circumstances in which Section 21(1) of the FSMA does not apply to the Issuer [or the Guarantor].

TAX

No comment is made or advice given by the Issuer,[the Guarantor,] the Arranger or any Dealer in respect of taxation matters relating to the Notes and each investor is advised to consult its own professional adviser.

The EU has adopted a Directive regarding the taxation of savings income. Subject to a number of important conditions being met, it is proposed that Member States will be required from a date not earlier than 1 July 2005 to provide to the tax authorities of other Member States details of payments of interest and other similar income paid by a person to an individual resident in another Member State, except that Austria, Belgium and Luxembourg will instead impose a withholding system for a transitional period unless during such period they elect otherwise. [It is expected that a number of third countries and territories including [•] will adopt similar measures with effect from the same date].

INTERPRETATION

In the Information Memorandum, references to euros and € refer to the single currency of participating Member States of the European Union; references to Sterling and £ are to pounds sterling; references to US Dollars and US$ are to United States dollars [; references to JPY and ¥ are to Japanese Yen]. [*Add additional currencies as appropriate*]

Where the Information Memorandum refers to the provisions of any other document, such reference should not be relied upon and the document must be referred to for its full effect.

DOCUMENTS INCORPORATED BY REFERENCE

The most recently published audited financial statements of the Issuer [and the Guarantor] and any subsequently published interim financial statements (whether audited or unaudited) of the Issuer [and the Guarantor] shall be deemed to be incorporated in, and to form part of, this Information Memorandum. [*Add additional documents as appropriate*]

Any statement contained in a document incorporated by reference into this Information Memorandum shall be deemed to be modified or superseded to the extent that a statement contained in any subsequent document which also is incorporated by reference into this Information Memorandum modifies or supersedes such statement (whether expressly, by implication or otherwise). Any statement so modified or superseded shall not be deemed, except as so modified or superseded, to constitute a part of this Information Memorandum.

Except as provided above, no other information, including information on the web sites of the Issuer [or Guarantor,] is incorporated by reference into this Information Memorandum.

Each Dealer will, following receipt of such documentation from the Issuer, provide to each person to whom a copy of this Information Memorandum has been delivered, upon request of such person, a copy of any or all the documents incorporated herein by reference unless such documents have been modified or superseded as specified above. Written requests for such documents should be directed to the relevant Dealer at its office as set out at the end of this Information Memorandum.

TABLE OF CONTENTS

Terms and Conditions

Description of the Issuer [and Guarantor]

Selling Restrictions

Forms of Notes

Programme Participants

TERMS AND CONDITIONS

Issuer:	[•]
[Guarantor:	[•]]
Arranger:	[•]
Dealers:	[•]
Issue and Paying Agent:	[•]
[Paying Agent:	[•]]
Maximum Amount of the Programme:	The outstanding principal amount of the Notes will not exceed [US$]/[€][•],000,000 (or its equivalent in other currencies) at any time. The Maximum Amount may be increased from time to time in accordance with the Dealer Agreement.
[Guarantee:	The Notes have the benefit of the Guarantee]
Programme Ratings:	Notes issued under the Programme have been assigned ratings by [Fitch Ratings,] [Moody's Investors Service, Inc.] [and] Standard & Poor's Rating Services, a division of The McGraw Hill Companies Inc. A rating is not a recommendation to buy, sell or hold securities and may be subject to suspension, reduction or withdrawal at any time by the relevant rating agency.

Form of the Notes:	The Notes will be in bearer form. The Notes will initially be in global form ("**Global Notes**")[or in the case of Sterling-denominated Notes, in definitive form ("**Sterling Definitive Notes**")]. A Global Note will be exchangeable into definitive notes ("**Definitive Notes**") only in the circumstances set out in that Global Note.
Delivery:	Global Notes will be deposited with a common depository for Euroclear Bank S.A./N.V. as the operator of the Euroclear clearing system ("**Euroclear**"), and Clearstream Banking, société anonyme ("**Clearstream, Luxembourg**") or with Euroclear France acting as a central depositary and clearing system ("**Euroclear France**") or with any other recognised clearing system. Account holders will, in respect of Global Notes, have the benefit of a Deed of Covenant dated [•] (the "**Deed of Covenant**"), copies of which may be inspected during normal business hours at the specified office of the Issuer and Paying Agent. [Sterling Definitive Notes will be available for collection in accordance with current London market practice and] Definitive Notes (if any are printed) will be available in London for collection or for delivery to Euroclear, Euroclear France, Clearstream, Luxembourg or any other recognised clearing system.

Currencies:	Notes may be denominated in euros, US Dollars, [JPY,] [Sterling] or any other currency subject to compliance with any applicable legal and regulatory requirements.
Term of Notes:	The tenor of the Notes shall be not less than one day or more than 364 days from and including the date of issue, subject to compliance with any applicable legal and regulatory requirements.
Denomination of the Notes:	Notes may have any denomination, subject to compliance with any applicable legal and regulatory requirements. The initial minimum denominations for Notes are US$[500,000], €[500,000], [£100,000,] [and ¥100,000,000]. The minimum denominations of Notes denominated in other currencies will be in accordance with any applicable legal and regulatory requirements. Minimum denominations may be changed from time to time.
Listing:	The Notes will not be listed on any stock exchange.
Yield Basis:	The Notes may be issued at a discount or may bear fixed[or floating] rate interest[or a coupon calculated by reference to an index or formula].
Redemption:	The Notes may be redeemed at par[or at an amount calculated by reference to an index or formula].

Status of the Notes:	The Issuer's obligations under the Notes will rank at least *pari passu* with all present and future unsecured and unsubordinated obligations of the Issuer other than obligations mandatorily preferred by law applying to companies generally.
[Status of the Guarantee:	The Guarantor's obligations under the Guarantee rank and will rank at least *pari passu* with all present and future unsecured and unsubordinated obligations of the Guarantor other than obligations mandatorily preferred by law applying to companies generally.]
Selling Restrictions:	Offers and sales of Notes and the distribution of this Information Memorandum and other information relating to the Issuer[, the Guarantor] and the Notes are subject to certain restrictions, details of which are set out under "Selling Restrictions" below.
Taxes:	Subject to the limitations and exceptions set out in the Notes[and the Guarantee], all payments under the Notes[and the Guarantee] will be made free and clear of withholding for any taxes imposed by the jurisdiction of incorporation of the Issuer [and the Guarantor] (being, as of the date hereof, [•] [and [•] respectively]) or any jurisdiction through or from which payments are made.
Governing Law:	The Notes[and the Guarantee] will be governed by and construed in accordance with English law.

DESCRIPTION OF THE ISSUER [AND GUARANTOR]

[A brief description of the Issuer,[the Guarantor,] its group and its business activities should be prepared by the Issuer [and/or the Guarantor] and inserted here]

SELLING RESTRICTIONS

[To conform with Dealer Agreement restrictions]

1. GENERAL

Each Dealer has represented, warranted and agreed that it will observe all applicable laws and regulations in any jurisdiction in which it may offer, sell, or deliver Notes and it will not directly or indirectly offer, sell, resell, re-offer or deliver Notes or distribute the Information Memorandum, circular, advertisement or other offering material in any country or jurisdiction except under circumstances that will result, to the best of its knowledge and belief, in compliance with all applicable laws and regulations.

2. UNITED STATES OF AMERICA

[The Notes have not been and will not be registered under the Securities Act and may not be offered or sold within the United States. Each Dealer has represented and agreed that it has offered and sold, and will offer and sell, Notes only outside the United States in accordance with Rule 903 of Regulation S. Accordingly, each Dealer has represented and agreed that neither it, nor any of its affiliates nor any persons acting on its or their behalf have engaged or will engage in any directed selling efforts with respect to the Notes. Terms used in this paragraph have the meanings given to them by Regulation S.]

OR

[The Notes [and the Guarantee] have not been and will not be registered under the Securities Act and the Notes and the Guarantee, if applicable, may not be offered or sold within the United States or to, or for the account or benefit of, US persons. Each Dealer has represented and agreed that it has offered and sold, and will offer and sell, Notes and the Guarantee only outside the United States to non-US persons in accordance with Rule 903 of Regulation S. Accordingly, each Dealer has represented and agreed that neither it, nor its affiliates nor any person acting on its or their behalf has engaged or will engage in any directed selling efforts with respect to the Notes and the Guarantee, and that it and they have complied and will

comply with the offering restrictions requirement of Regulation S. Each Dealer has also agreed that, at or prior to confirmation of sale of Notes and the Guarantee, it will have sent to each distributor, dealer or person receiving a selling commission, fee or other remuneration that purchases Notes from it a confirmation or notice to substantially the following effect:

"The Securities covered hereby have not been registered under the United States Securities Act of 1933, as amended (the "**Securities Act**") and may not be offered or sold within the United States or to, or for the account or benefit of, US persons. Terms used above have the meanings given to them by Regulation S under the Securities Act."

Terms used in this paragraph have the meanings given to them by Regulation S].

3. THE UNITED KINGDOM[1]

Each Dealer has represented and agreed, and each further Dealer appointed under the Programme will be required to represent and agree, that:

(a) [

(i) it is a person whose ordinary activities involve it in acquiring, holding, managing or disposing of investments (as principal or agent) for the purposes of its business; and

(ii) it has not offered or sold and will not offer or sell any Notes other than to persons whose ordinary activities involve them in acquiring, holding, managing or disposing of investments (as principal or as agent) for the purposes of their businesses or who it is reasonable to expect will acquire, hold, manage or dispose of investments (as principal or agent) for the purposes of their businesses where the issue of the Notes would otherwise constitute a contravention of Section 19 of the Financial Services and Markets Act 2000 (the "**FSMA**") by the Issuer;][2]

(b) it has only communicated or caused to be communicated and will only communicate or cause to be communicated an invitation or inducement to engage in investment activity (within the meaning of Section 21 of the FSMA) received by it in connection with the

issue or sale of any Notes in circumstances in which Section 21(1) of the FSMA does not apply to the Issuer [or the Guarantor]; and

(c) it has complied and will comply with all applicable provisions of the FSMA with respect to anything done by it in relation to such Notes in, from or otherwise involving the United Kingdom.

4. JAPAN

Each Dealer has acknowledged that the Notes have not been and will not be registered under the Securities and Exchange Law of Japan (the "**Securities and Exchange Law"**) and, accordingly, each Dealer has undertaken that it will not offer or sell any Notes, directly or indirectly, in Japan or to, or for the benefit of, any Japanese Person or to others for re-offering or resale, directly or indirectly, in Japan or to any Japanese Person, except pursuant to an exemption from the registration requirements of, and otherwise in compliance with, the Securities and Exchange Law and any other applicable laws, regulations and ministerial guidelines of Japan. For these purposes "**Japanese Person**" means any person resident in Japan, including any corporation or other entity organised under the laws of Japan.

[Additional selling restrictions to be inserted in respect of the jurisdiction of incorporation of the Issuer [and the Guarantor], if not any of the above jurisdictions. Local counsel to the Issuer to advise as to the form of selling restrictions and any other relevant requirements]

Notes

[1] *The UK selling restriction below is extracted from the latest working drafts of the ICMA new standard form selling restrictions.*

[2] *Can be deleted if the Issuer is an authorised person permitted to accept deposits or an exempt person under FSMA.*

FORMS OF NOTES

[*To be taken from the Schedule to the Agency Agreement once agreed by all parties*]

PROGRAMME PARTICIPANTS

ISSUER
[NAME OF ISSUER]
[Address of Issuer]
Telephone No: [•]
Facsimile No: [•]
Attention: [•]

[GUARANTOR
[NAME OF GUARANTOR]
[Address of Guarantor]
Telephone No: [•]
Facsimile No: [•]
Attention: [•]]

ARRANGER
[NAME OF ARRANGER]
[Address of Arranger]
Telephone No: [•]
Facsimile No: [•]
Attention: [•]

DEALERS
[NAME OF DEALER]
[Address of Dealer]
Telephone No: [•]
Facsimile No: [•]
Attention: [•]

THE ISSUE AND PAYING AGENT
[Name of Issue and Paying Agent]
[Address of Issue and Paying Agent]
Telephone No: [•]
Facsimile No: [•]
Attention: [•]

[THE PAYING AGENT
[Name of Paying Agent]
[Address of Paying Agent]
Telephone No: [•]
Facsimile No: [•]
Attention: [•]]

FORM OF MULTICURRENCY GLOBAL NOTE
(Interest Bearing/Discounted/Index-Linked)

[The Securities covered hereby have not been registered under the US Securities Act of 1933, as amended (the "**Securities Act"**) and may not be offered or sold within the United States or to, or for the account or benefit of, US persons. Terms used above have the meanings given to them by Regulation S under the Securities Act.] **[*N.B. – only include if the Dealer Agreement/Information Memorandum contain category 2 US selling restrictions*]**

[NAME OF ISSUER]
(Incorporated in [ ])
[guaranteed by
[NAME OF GUARANTOR]]
(Incorporated in [ ])]

No: _____ Series No.: _____

Issued in London on:_____ Maturity Date[1]:_____

Specified Currency:_____ Denomination: _____

Nominal Amount: _____ Reference Rate: LIBOR/EURIBOR[2]
(words and figures if a Sterling Note)

Calculation Agent:[3] _____ Minimum Redemption Amount[4] ___

Fixed Interest Rate:[5]_ %per annum Margin:[6] %

Calculation Agent:[7] _____ Interest Payment Dates:[8] _____
(*Interest*)

Notes

[1] *"Not to be more than 364 days from (and including) the Issue Date."*

[2] *Delete as appropriate. The reference rate will be LIBOR unless this Global Note is denominated in euro and the Issuer and the relevant Dealer agree that the reference rate should be EURIBOR.*

[3] *Complete for index-linked Notes only.*

[4] *"Complete for a Sterling index-linked note."*

[5] *Complete for fixed rate interest bearing Notes only.*

[6] *Complete for floating rate interest bearing Notes only.*

[7] *Complete for floating rate interest bearing Notes only.*

[8] *Complete for interest bearing Notes.*

1. For value received, **[*NAME OF ISSUER*]** (the "**Issuer**") promises to pay to the bearer of this Global Note on the above-mentioned Maturity Date [:

(a)]the above-mentioned Nominal Amount[* ; or

(b) if this Global Note is index-linked, an amount (representing either principal or interest) to be calculated by the Calculation Agent named above, in accordance with the redemption or interest calculation, a copy of which is attached to this Global Note and is available for inspection at the offices of the Paying Agent referred to below,]

together (in any case) with interest thereon at the rate and at the times (if any) specified herein.

All such payments shall be made in accordance with [an [issue/issuing] and paying]/ [a note] agency agreement dated [*date*] between the Issuer [and the Guarantor], the issue agent and the paying agents referred to therein, a copy of which is available for inspection at the offices of [ ] (the "**Paying Agent**") at [Address], and subject to and in accordance with the terms and conditions set forth below. All such payments shall be made upon presentation and surrender of this Global Note at the offices of the Paying Agent referred to above by transfer to an account denominated in the above-mentioned Specified Currency maintained by the bearer with a bank in the principal financial centre in the country of that currency or, in the case of a Global Note denominated or payable in euro by transfer to a euro account (or any other account to which euro may be credited or transferred) maintained by the payee with, a bank in the principal financial centre of any Member State of the European Union. [If European Council Directive 2003/48/EC or any other Directive implementing the conclusions of the ECOFIN Council meeting of 26–27 November 2000 is brought into force, the Issuer [and Guarantor] will ensure that [it] [they] maintain[s] a paying agent in a Member State of the European Union that will not be obliged to withhold or deduct tax pursuant to such Directive or any law implementing or complying with, or introduced to conform to, such Directive.]

* *Include if there is a possibility of Notes being index-linked.*

[Notwithstanding the foregoing, presentation and surrender of this Global Note shall be made outside the United States and no amount shall be paid by transfer to an account in the United States, or mailed to an address in the United States. In the case of a Global Note denominated in US Dollars, payments shall be made by transfer to an account denominated in US Dollars in the principal financial centre of any country outside of the United States that the Issuer or Agent so chooses.]

2. This Global Note is issued in representation of an issue of Notes in the above-mentioned aggregate Nominal Amount.

3. All payments in respect of this Global Note by or on behalf of the Issuer shall be made without set-off, counterclaim, fees, liabilities or similar deductions and free and clear of, and without deduction or withholding for or on account of, taxes, levies, duties, assessments or charges of any nature now or hereafter imposed, levied, collected, withheld or assessed by or on behalf of [Issuer's taxing jurisdiction] or any political subdivision or taxing authority of or in any of the foregoing ("**Taxes**"). If the Issuer or any agent thereof is required by law or regulation to make any deduction or withholding for or on account of Taxes, the Issuer shall, to the extent permitted by applicable law or regulation, pay such additional amounts as shall be necessary in order that the net amounts received by the bearer of this Global Note after such deduction or withholding shall equal the amount which would have been receivable hereunder in the absence of such deduction or withholding, except that no such additional amounts shall be payable where this Global Note is presented for payment:

(a) by or on behalf of a holder which is liable to such Taxes by reason of its having some connection with the jurisdiction imposing the Taxes other than the mere holding of this Global Note; or

(b) where such deduction or withholding is imposed on a payment to an individual and is required to be made pursuant to European Council Directive 2003/48/EC or any other Directive implementing the conclusions of the ECOFIN Council meeting of 26-27 November 2000 on the taxation of savings income or any law implementing or complying with, or introduced in order to conform to, such Directive; or

(c) by or on behalf of a holder who would have been able to avoid such withholding or deduction by [(i)] presenting this Global Note to

another Paying Agent in a Member State of the European Union [or (ii) by authorising the Paying Agent to report information in accordance with the procedure laid down by the relevant tax authority or by producing, in the form required by the relevant tax authority, a declaration, claim, certificate, document or other evidence establishing exemption therefrom]; or

(d) more than 15 days after the Maturity Date or, if applicable, the relevant Interest Payment Date or (in either case) the date on which payment hereof is duly provided for, whichever occurs later, except to the extent that the holder would have been entitled to such additional amounts if it had presented this Global Note on the last day of such period of 15 days.

4. If the Maturity Date or, if applicable, the relevant Interest Payment Date is not a Payment Business Day (as defined herein) payment in respect hereof will not be made and credit or transfer instructions shall not be given until the next following Payment Business Day (unless that date falls more than 364 days after the Issue Date, in which case payment shall be made on the immediately preceding Payment Business Day) and neither the bearer of this Global Note nor the holder or beneficial owner of any interest herein or rights in respect hereof shall be entitled to any interest or other sums in respect of such postponed payment.

As used in this Global Note:

"**Payment Business Day**" means any day other than a Saturday or Sunday which is both (A) a day on which commercial banks and foreign exchange markets settle payments and are open for general business (including dealings in foreign exchange and foreign currency deposits) in the relevant place of presentation, and (B) either (i) if the above-mentioned Specified Currency is any currency other than euro, a day on which commercial banks and foreign exchange markets settle payments and are open for general business (including dealings in foreign exchange and foreign currency deposits) in both London and the principal financial centre of the country of the relevant Specified Currency or (ii) if the above-mentioned Specified Currency is euro, a day which is a TARGET Business Day; and

"**TARGET Business Day**" means a day on which the Trans-European Automated Real-time Gross Settlement Express Transfer (TARGET)

System, or any successor thereto, is operating credit or transfer instructions in respect of payments in euro.

Provided that if the Paying Agent determines with the agreement of the Issuer that the market practice in respect of euro denominated internationally offered securities is different from that specified above, the above shall be deemed to be amended so as to comply with such market practice and the Paying Agent shall procure that a notice of such amendment is published not less than 15 days prior to the date on which any payment in euro falls due to be made in such manner as the Paying Agent may determine.

5. The payment obligation of the Issuer represented by this Global Note constitutes and at all times shall constitute a direct and unsecured obligation of the Issuer ranking at least *pari passu* with all present and future unsecured and unsubordinated indebtedness of the Issuer other than obligations preferred by mandatory provisions of law applying to companies generally.

6. This Global Note is negotiable and, accordingly, title hereto shall pass by delivery and the bearer shall be treated as being absolutely entitled to receive payment upon due presentation hereof free and clear of any equity, set-off or counterclaim on the part of the Issuer against any previous bearer hereof.

7. This Global Note is issued in respect of an issue of Notes of the Issuer and is exchangeable in whole (but not in part only) for duly executed and authenticated bearer Notes in definitive form (whether before, on or, subject as provided below, after the Maturity Date):

(a) if the clearing system(s) in which this Global Note is held at the relevant time is closed for a continuous period of 14 days or more (other than by reason of weekends or public holidays statutory or otherwise) or announces an intention permanently to cease business or does in fact do so; or

(b) if default is made in the payment of any amount payable in respect of this Global Note.

Upon presentation and surrender of this Global Note during normal business hours to the Issuer at the offices of the Paying Agent (or to

any other person or at any other office outside the United States as may be designated in writing by the Issuer to the bearer), the Issue Agent shall authenticate and deliver, in exchange for this Global Note, bearer definitive notes denominated in the above-mentioned Specified Currency in an aggregate nominal amount equal to the Nominal Amount of this Global Note.

8. If, upon any such default and following such surrender, definitive Notes are not issued in full exchange for this Global Note before 5.00 p.m. (London time) on the thirtieth day after surrender, this Global Note (including the obligation hereunder to issue definitive notes) will become void and the bearer will have no further rights under this Global Note (but without prejudice to the rights which the bearer or any other person may have under a Deed of Covenant dated [*date*] (as amended, re-stated or supplemented as of the date of issue of the Notes) entered into by the Issuer).

9. [This Global Note has the benefit of a guarantee issued by **[*NAME OF GUARANTOR*]** on [ ], copies of which are available for inspection during normal business hours at the offices of the Paying Agent referred to above.]

10. If this is an interest bearing Global Note, then:

(a) notwithstanding the provisions of paragraph 1 above, if any payment of interest in respect of this Global Note falling due for payment prior to the above-mentioned Maturity Date remains unpaid on the fifteenth day after falling so due, the amount referred to in part (a) or (b) (as the case may be) of paragraph 1 shall be payable on such fifteenth day;

(b) upon each payment of interest (if any) prior to the Maturity Date in respect of this Global Note, the Schedule hereto shall be duly completed by the Paying Agent to reflect such payment; and

(c) if no Interest Payment Dates are specified on the face of the Global Note, the Interest Payment Date shall be the Maturity Date.

11. If this is a fixed rate interest bearing Global Note, interest shall be calculated on the Nominal Amount as follows:

(a) interest shall be payable on the Nominal Amount in respect of each successive Interest Period (as defined below) from the Issue Date to the Maturity Date only, in arrear on the relevant Interest Payment Date, on the basis of the actual number of days in such Interest Period and a year of 360 days *[or, if this Global Note is denominated in Sterling, 365] days at the above-mentioned Interest Rate with the resulting figure being rounded to the nearest amount of the above-mentioned Specified Currency which is available as legal tender in the country or countries (in the case of the euro) of the Specified Currency (with halves being rounded upwards); and

(b) the period beginning on (and including) the Issue Date and ending on (but excluding) the first Interest Payment Date and each successive period beginning on (and including) an Interest Payment Date and ending on (but excluding) the next succeeding Interest Payment Date is an "**Interest Period**" for the purposes of this paragraph.

12. If this is a floating rate interest bearing Global Note, interest shall be calculated on the Nominal Amount as follows:

(a) in the case of a Global Note which specifies LIBOR as the Reference Rate on its face, the Rate of Interest will be the aggregate of LIBOR and the above-mentioned Margin (if any) above or below LIBOR. Interest shall be payable on the Nominal Amount in respect of each successive Interest Period (as defined below) from the Issue Date to the Maturity Date only, in arrear on the relevant Interest Payment Date, on the basis of the actual number of days in such Interest Period and a year of 360 days *[or, if this Global Note is denominated in Sterling, 365 days].

As used in this Global Note:

"**LIBOR**" shall be equal to the rate defined as "LIBOR-BBA" in respect of the above-mentioned Specified Currency (as defined in the 2000 ISDA Definitions published by the International Swaps and Derivatives Association, Inc., as amended, updaed or replaced as at the date of this Global Note, (the "**ISDA Definitions**")) as

* *Include if there is a sterling option or the possibility of a sterling option.*

at 11.00 a.m. (London time) or as near thereto as practicable on the second London Banking Day before the first day of the relevant Interest Period *[or, if this Global Note is denominated in Sterling, on the first day thereof] (a "**LIBOR Interest Determination Date**"), as if the Reset Date (as defined in the ISDA Definitions) were the first day of such Interest Period and the Designated Maturity (as defined in the ISDA Definitions) were the number of months specified on the face of this Note in relation to the Reference Rate; and

"**London Banking Day**" shall mean a day on which commercial banks are open for general business (including dealings in foreign exchange and foreign currency deposits) in London;

(b) in the case of a Global Note which specifies EURIBOR as the Reference Rate on its face, the Rate of Interest will be the aggregate of EURIBOR and the above-mentioned Margin (if any) above or below EURIBOR. Interest shall be payable on the Nominal Amount in respect of each successive Interest Period (as defined below) from the Issue Date to the Maturity Date only, in arrear on the relevant Interest Payment Date, on the basis of the actual number of days in such Interest Period and a year of 360 days.

As used in this Global Note, "**EURIBOR**" shall be equal to EUR-EURIBOR-Telerate (as defined in the ISDA Definitions) as at 11.00 a.m. (Brussels time) or as near thereto as practicable on the second TARGET Business Day before the first day of the relevant Interest Period (a "**EURIBOR Interest Determination Date**");

(c) the Calculation Agent will, as soon as practicable after 11.00 a.m. (London time) on each LIBOR Interest Determination Date or 11.00 a.m. (Brussels time) on each EURIBOR Interest Determination Date (as the case may be), determine the Rate of Interest and calculate the amount of interest payable (the "**Amount of Interest**") for the relevant Interest Period. "**Rate of Interest**" means (A) if the Reference Rate is EURIBOR, the rate which is determined in accordance with the provisions of paragraph [12(b)], and (B) in any other case, the rate which is determined in accordance with the provisions of paragraph [12(a)]. The Amount of Interest shall be calculated by applying

the Rate of Interest to the Nominal Amount of one Note of each denomination, multiplying such product by the actual number of days in the Interest Period concerned divided by 360 [*][or, if this Global Note is denominated in Sterling, by 365] and rounding the resulting figure to the nearest amount of the above-mentioned Specified Currency which is available as legal tender in the country or countries (in the case of the euro) of the Specified Currency (with halves being rounded upwards). The determination of the Rate of Interest and the Amount of Interest by the Calculation Agent named above shall (in the absence of manifest error) be final and binding upon all parties;

(d) the period beginning on (and including) the Issue Date and ending on (but excluding) the first Interest Payment Date and each successive period beginning on (and including) an Interest Payment Date and ending on (but excluding) the next succeeding Interest Payment Date is called an "**Interest Period**" for the purposes of this paragraph; and

(e) the Issuer will procure that a notice specifying the Rate of Interest payable in respect of each Interest Period be published as soon as practicable after the determination of the Rate of Interest. Such notice will be delivered to the clearing system(s) in which this Global Note is held at the relevant time or, if this Global Note has been exchanged for bearer definitive Notes pursuant to paragraph 7, will be published in a leading English language daily newspaper published in London (which is expected to be the *Financial Times*).

13. If the proceeds of this Global Note are accepted in the United Kingdom, the Principal Amount or Minimum Redemption Amount (as applicable) shall be not less than £100,000 (or the equivalent in any other currency).

14. Instructions for payment must be received at the offices of the Paying Agent referred to above together with this Global Note as follows:

(a) if this Global Note is denominated in Australian dollars, New Zealand dollars, Hong Kong dollars or Japanese Yen, at least two Business Days prior to the relevant payment date;

[*] *Include if there is a sterling option or the possibility of a sterling option.*

(b) if this Global Note is denominated in United States dollars, Canadian dollars or Sterling, on or prior to the relevant payment date; and

(c) in all other cases, at least one Business Day prior to the relevant payment date.

As used in this paragraph, "**Business Day**" means:

(i) a day other than a Saturday or Sunday on which commercial banks are open for general business (including dealings in foreign exchange and foreign currency deposits) in London; and

(ii) in the case of payments in euro, a TARGET Business Day and, in all other cases, a day on which commercial banks are open for general business (including dealings in foreign exchange and foreign currency deposits) in the principal financial centre in the country of the above-mentioned Specified Currency.

15. This Global Note shall not be validly issued unless manually authenticated by [*Paying Agent*] as issue agent.

16. This Global Note [and all matters arising from or connected with it] [is/are] governed by, and shall be construed in accordance with, English law.

The English courts have exclusive jurisdiction to settle any dispute arising out of or in connection with this Global Note (including a dispute regarding the existence, validity or termination of this Global Note). The parties to this Global Note agree that the English courts are the most appropriate and convenient courts to settle any such dispute and accordingly no such party will argue to the contrary.

The Issuer (if not incorporated in England and Wales) irrevocably appoints [ ] at [specify address] as its agent for service of process in any proceedings before the English courts in connection with this Global Note. If any person appointed as process agent is unable for any reason to act as agent for service of process, the Issuer will appoint another agent, and failing such appointment within 15 days, the bearer shall be entitled to appoint such a person by written notice addressed to the Issuer and delivered to the Issuer or to the Specified Office of the Paying Agent. The

Issuer agrees that failure by a process agent to notify it of any process will not invalidate the relevant proceedings. This paragraph 16 does not affect any other method of service allowed by law.

The Issuer irrevocably and unconditionally, agrees not to claim any immunity from proceedings brought by the bearer against it in relation to this Global Note and to ensure that no such claim is made on its behalf, consents generally to the giving of any relief or the issue of any process in connection with those proceedings, and waives all rights of immunity in respect of it or its assets.

[EACH PARTY WAIVES ANY RIGHT IT MAY HAVE TO A JURY TRAIL OF ANY CLAIM OR CAUSE OF ACTION IN CONNECTION WITH THIS GLOBAL NOTE OR ANY TRANSACTION CONTEMPLATED BY THIS GLOBAL NOTE. THIS AGREEMENT MAY BE FILED AS A WRITTEN CONSENT TO TRIAL BY COURT.] [*Use if US Issuer involved*]

17. No person shall have any right to enforce any provision of this Note under the Contracts (Rights of Third Parties) Act 1999 but this does not affect any right or remedy of any person which exists or is available apart from that Act.

AUTHENTICATED by [***ISSUE AGENT***] without recourse, warranty or liability and for authentication purposes only	Signed on behalf of: [***NAME OF ISSUER***]
By: _____ (*Authorised Signatory*)	By:_____ (*Authorised Signatory*)

SCHEDULE

PAYMENTS OF INTEREST

The following payments of interest in respect of this Global Note have been made:

Date Made	Payment From	Payment To	Amount Paid	Notation on behalf of Paying Agent
•	•	•	•	•
•	•	•	•	•
•	•	•	•	•
•	•	•	•	•
•	•	•	•	•

PRO-FORMA REDEMPTION OR INTEREST CALCULATION (INDEX LINKED GLOBAL NOTE)

This is the Redemption or Interest Calculation relating to the attached index-linked Global Note:

Calculation Date: _____

Calculation Agent: _____

Redemption Amount (per note):	to be calculated by the Calculation Agent as follows: [Insert particulars of index and redemption calculation] [Indicate whether the calculation refers to principal or coupon]

Confirmed:

_____

For **[*NAME OF ISSUER*]**

Note: The Calculation Agent is required to notify the Principal Paying Agent for the Notes of the Redemption Amount immediately upon completing its calculation of the same.

SECTION SEVEN
ICMA STANDARD DOCUMENTATION AND STANDARD LANGUAGE

XI

Market Abuse Directive – Stabilisation Safe Harbour

(a) Pre-Stabilisation Announcement

(b) Post-Stabilisation Announcement

(c) Stabilisation Legend

MARKET ABUSE DIRECTIVE – STABILISATION SAFE HARBOUR

ICMA is publishing the following suggested forms of the pre-stabilisation and post-stabilisation announcements and stabilisation legend.

They assume an offering of (non-convertible) debt securities (without a greenshoe option) where the securities being offered are to be listed in the UK and are to be admitted to trading on a regulated market in the UK.

Additional selling restrictions or legends may be required to comply with laws applicable to a particular offering of securities.

References to the Co-ordinating Stabilising Manager are to the manager who is making the announcements for the managers in the syndicate, if any, who have been appointed stabilising managers.

The suggested forms have been prepared with the help of the ICMA Members and a group of City of London capital markets law firms and have been circulated to a number of other law firms prior to publication. ICMA is extremely grateful for the advice and assistance it has received.

The suggested forms have not been approved by any competent authority. They are neither a 'maximum' nor a 'minimum' in terms of content. They are not intended as legal advice and it is for issuers and their advisers to decide how to comply with the legal requirements applicable to a particular offering of securities.

PRE-STABILISATION ANNOUNCEMENT

The following is a suggested form of an RIS announcement to satisfy the requirements of Article 8(4) and 9(1) of Commission Regulation 2273/2003 for pre-stabilisation announcement.

[DATE]

Not for distribution, directly or indirectly, in or into the United States or any jurisdiction in which such distribution would be unlawful.

[ISSUER]

Stabilisation Notice

[Name of Co-ordinating Stabilising Manager] (contact: [name]; telephone: [number]) hereby gives notice that the Stabilising Manager(s) named below may stabilise the offer of the following securities in accordance with Commission Regulation (EC) No. 2273/2003 implementing the Market Abuse Directive (2003/6/EC).

The securities:[1]	
Issuer:	[ ]
Guarantor (if any):	[ ]
Aggregate nominal amount:	[ ]
Description:	[ ]
Offer price:	[ ]
Other offer terms:[2]	[ ]
Stabilisation:	
Stabilising Manager(s):[3]	[ ] [ ]

Stabilisation period expected to start on:[4]	[date] [the date of this announcement]
Stabilisation period expected to end no later than:[5]	[date] (30 days after the proposed issue date of the securities)[6]
Existence, maximum size and conditions of use of over-allotment facility:[7]	The Stabilising Manager(s) may over-allot the securities to the extent permitted in accordance with applicable law[8].

In connection with the offer of the above securities, the Stabilising Manager(s) may over-allot the securities or effect transactions with a view to supporting the market price of the securities at a level higher than that which might otherwise prevail. However, there is no assurance that the Stabilising Manager(s) will take any stabilisation action and any stabilisation action, if begun, may be ended at any time[9]. Any stabilisation action or over-allotment shall be conducted in accordance with all applicable laws and rules.

This announcement is for information purposes only and does not constitute an invitation or offer to underwrite, subscribe for or otherwise acquire or dispose of any securities of the Issuer in any jurisdiction.

This announcement and the offer of the securities to which it relates are only addressed to and directed at persons outside the United Kingdom and persons in the United Kingdom who have professional experience in matters related to investments or who are high net worth persons within article 12(5) of the Financial Services and Markets Act 2000 (Financial Promotion) Order 2005 and must not be acted on or relied on by other persons in the United Kingdom[10].

In addition, if and to the extent that this announcement is communicated in, or the offer of the securities to which it relates is made in, any EEA Member State that has implemented Directive 2003/71/EC (together with any applicable implementing measures in any Member State, the "Prospectus Directive") before the publication of a prospectus in relation to the securities which has been approved by the competent authority in that Member State in accordance with the Prospectus Directive (or which has been approved by a competent authority in another Member State and notified to the competent authority in that Member State in accordance

with the Prospectus Directive), this announcement and the offer are only addressed to and directed at persons in that Member State who are qualified investors within the meaning of the Prospectus Directive (or who are other persons to whom the offer may lawfully be addressed) and must not be acted on or relied on by other persons in that Member State[11].

This announcement is not an offer of securities for sale into the United States. The securities have not been, and will not be, registered under the United States Securities Act of 1933 and may not be offered or sold in the United States absent registration or an exemption from registration. There will be no public offer of securities in the United States.

Notes

[1] *Article 8(4) of the Regulation requires disclosure of the terms of the offer (including the spread to the benchmark, if any, once it has been fixed).*

[2] *For example, in a convertible offering, include conversion price. Delete if inapplicable.*

[3] *Article 9(1)(d) requires disclosure of the identity of the stabilisation managers.*

[4] *Article 9(1)(c) requires disclosure of the beginning of the stabilisation period.*

[5] *Article 9(1)(c) requires disclosure of the end of the stabilisation period.*

[6] *Alternatively, if shorter, the stabilisation period must end no later than 60 days after the date of the allotment.*

[7] *Article 9(1)(e) requires disclosure of the existence, maximum size and conditions for use of any over-allotment facility. "Over-allotment facility" is defined in Article 2(13) of the Regulation as "a clause in the underwriting or lead management agreement which permits acceptance of subscriptions or offers to purchase a greater number of securities than originally offered." In practice, underwriting/dealer agreements provide that certain of the Managers may over-allot, but that in doing so they act as principal and not as agent of the issuer; and*

that the Managers acknowledge that the issuer has not authorised the issue of greater number of securities than the amount of the original issue. Within the context of Article 9(1)(e) of the Regulation, such an arrangement does not have a maximum size and its use is not constrained by conditions, other than the requirement that the conduct must comply with applicable law. In such an arrangement, the only part of Article 9(1)(e) of the Regulation that might apply is the requirement to disclose the existence of the over-allotment facility. However, if the agreement in fact does impose a maximum amount and/or conditions of use of the over-allotment facility, they should be included in the announcement.

[8] *The disclosure should reflect the terms of the underwriting/dealer agreement. If the underwriting/dealer agreement specifically limits over-allotment to 5% of the aggregate nominal amount, the disclosure should read: "The Stabilising Manager(s) may over-allot the securities in an amount not exceeding 5% of the aggregate nominal amount stated above."*

[9] *Article 9(1)(a) of the Regulation requires disclosure of the fact that stabilisation may be undertaken, that there is no assurance that it will be undertaken and that it may be stopped at any time.*

[10] *Article 12(4)(a) and (b) and (5) of the Financial Promotion Order. In addition, in order to rely on the safe harbour under article 12(3), the communication should not be referred to in, or be directly accessible from, any other communication made to or directed at other kinds of persons in the UK by the Co-ordinating Stabilising Manager (article 12(4)(c) and (6)(c) Financial Promotion Order) and the Co-ordinating Stabilising Manager should have in place proper systems and procedures to prevent recipients in the UK (other than those to whom the communication might otherwise lawfully have been made by the Co-ordinating Stabilising Manager or a member of its group) engaging in investment activity to which the announcement relates with the Co-ordinating Stabilising Manager or a member of its group (article 12(4)(e) Financial Promotion Order).*

[11] *Article 3(2) Prospectus Directive.*

POST-STABILISATION ANNOUNCEMENT

The following is a suggested form of an RIS announcement to satisfy the requirements of Article 9(3) of Commission Regulation 2273/2003 for post-stabilisation announcement.

[DATE]

Not for distribution, directly or indirectly, in or into the United States or any jurisdiction in which such distribution would be unlawful.

[ISSUER]

Stabilisation Notice

[Name of Co-ordinating Stabilising Manager] (contact: [name]; telephone: [number]) hereby gives notice that no stabilisation (within the meaning of the rules of the Financial Services Authority)[1] was undertaken by the Stabilising Manager(s)[2] named below in relation to the offer of the following securities.

Issuer:	[ ]
Guarantor (if any):	[ ]
Aggregate nominal amount:	[e.g. US$100,000,000]
Description:	[7 per cent Notes due 2010]
Offer price:	[Name] [Name]

OR

[Name of Co-ordinating Stabilising Manager] (contact: [name]; telephone: [number]) hereby gives notice that the Stabilising Manager(s) named below undertook stabilisation (within the meaning of the rules of

the Financial Services Authority) in relation to the offer of the following securities, as set out below.

Issuer:	[ ]
Guarantor (if any):	[ ]
Aggregate nominal amount:	[e.g. US$100,000,000]
Description:	[e.g. 7 per cent Notes due 2010]
Stabilising Manager(s)	[Name] [Name]
Stabilisation started:	[Date]
Stabilisation last occured:	[Date]

[Although stabilisation offers were made, no stabilisation transactions were carried out].[3]

[For each of the dates during which stabilisation transactions were carried out, the price range[4] was as follows:[5]]

Date	Lowest Price	Highest Price

This announcement is for information purposes only and does not constitute an invitation or offer to underwrite, subscribe for or otherwise acquire or dispose of any securities of the Issuer in any jurisdiction.

This announcement is not an offer of securities for sale into the United States. The securities referred to above have not been, and will not be, registered under the United States Securities Act of 1933 and may not be offered or sold in the United States absent registration or an exemption from registration. There has not been and will not be a public offer of the securities in the United States.

Notes

[1] *The notice refers to FSA rules rather than the Regulation as some stabilisation may occur before application is made for admission to the regulated market.*

[2] *The Co-ordinating Stabilising Manager is likely to prefer to restrict the information on stabilisation to that given to it by the Stabilising Managers.*

[3] *The definition of stabilisation includes both purchases and offers to purchase. Therefore, it is possible that stabilisation occurs but no stabilisation transactions are carried out.*

[4] *The prices stated should be absolute prices e.g. expressed as a percentage of nominal value.*

[5] *The references in article 9(3)(d) to stabilisation transactions suggests that the announcement need only include information with respect to transactions actually carried out. Additional information may be necessary if the Stabilising Managers undertook stabilisation transactions in any associated instruments.*

STABILISATION LEGEND

The following is a suggested form of a stabilisation legend to be included in a base prospectus.

"In connection with the issue of any Tranche of Notes, the Dealer or Dealers (if any) named as the Stabilising Manager(s) (or persons acting on behalf of any Stabilising Manager(s)) in the applicable [Final Terms or Pricing Supplement] may over-allot Notes[1] or effect transactions with a view to supporting the market price of the Notes at a level higher than that which might otherwise prevail. However, there is no assurance that the Stabilising Manager(s) (or persons acting on behalf of a Stabilising Manager) will undertake stabilisation action. Any stabilisation action may begin on or after the date on which adequate public disclosure of the terms[2] of the offer of the relevant Tranche of Notes is made and, if begun, may be ended at any time, but it must end no later than the earlier of 30 days after the issue date of the relevant Tranche of Notes and 60 days after the date of the allotment of the relevant Tranche of Notes. Any stabilisation action or over-allotment must be conducted by the relevant Stabilising Manager(s) (or person(s) acting on behalf of any Stabilising Manager(s)) in accordance with all applicable laws and rules."

Notes

[1] *This disclosure assumes that the corresponding provision in the dealer agreement does not include an explicit restriction on the extent of over-allotment. The dealer agreements may include an explicit restriction on the extent of over-allotment, such as "(provided that, in the case of any Tranche of Notes to be admitted to trading on the London Stock Exchange/Luxembourg Stock Exchange, the aggregate principal amount of Notes allotted does not exceed 105 per cent of the aggregate principal amount of the relevant Tranche)". If so, this should be reflected in the base prospectus disclosure.*

However, even if the dealer agreement does not include an explicit restriction on the extent of over-allotment, the stabilising manager(s) should consider whether to restrict the level of over-allotment in order to comply with applicable laws and rules, such as those laws or rules relating to market abuse. In particular, while the exercise of an over-allotment clause in an underwriting or lead management agreement can

benefit from the safe harbour provided in the Market Abuse Directive in relation to significant distributions of securities admitted or the subject of a request for admission to trading on a regulated market, one of the specified conditions for the availability of the safe harbour is that any resulting position (which is not covered by a greenshoe option) may not exceed 5% of the original offer (see Article 11(b) of Commission Regulation 2273/2003).

[2] *If the programme may include Notes which are convertible or exchangeable into shares or into other securities equivalent to shares, this should be adapted so as to refer to the "final terms" of the offer in relation to such Notes (see Article 8(5) of Commission Regulation 2273/2003).*

SECTION EIGHT
ICMA GUIDANCE NOTES/PRESS STATEMENTS

Guidance Notes

1. Printing Definitive Certificates
2. Disclosure of Side Arrangements in the context of Force Majeure
3. Fungible Issues: Recommendation 1.12.2
4. Due Diligence
5. Limited Payment Obligations
6. *This has been withdrawn*
7. *This has been moved to Section Four Guidance Note 1*
8. Provision of Information and Documents to Intermediaries
9. *This has been moved to Section Four Guidance Note 2*
10. *This has been moved to Section Four Recommendation 4.7*
11. *This has been moved to Section Four Guidance Note 3*
12. *This has been moved to Section Four Guidance Note 4*
13. *This has been moved to Section Four Guidance Note 5*
14. *This has now been moved to ICMA Standard Documentation and Standard Language IV, Annex B*
15. DMO Calculation for Termination Calculation in Sterling Bond Issues
16. Information Clauses in Sovereign Debt Issues
17. The Calculation Agency Role with respect to certain Derivative-Linked Securities
18. Denominations of €50,000 and integral multiples of €1,000
19. New Safekeeping Structure for Registered Notes – Changes to Legal Documentation
20. Prospectus Directive – Considerations for Exempt Offers and Non-exempt Offers of Sub-€50,000 Denomination Bonds in the EAA

Press Statements

1. Disclosure of Distribution
2. Semi-Permanent Global Notes
3. Joint Statement on Market Conventions for the Euro

March 2010

ICMA GUIDANCE NOTES / PRESS STATEMENTS
GUIDANCE NOTE 1

PRINTING DEFINITIVE CERTIFICATES

The Legal & Documentation Committee have considered a number of representations to the effect that, in certain types of issues designed for retail investors, there is sometimes unsatisfied demand for definitive certificates in smaller denominations.

The Committee would therefore urge Members to endeavour for retail issues to produce a sufficiently large number of definitive certificates in sufficiently small denominations to meet the anticipated requirements of investors. Members will of course appreciate that, in issues expected to be of particular interest to the retail sector, a greater number of definitive certificates in smaller denominations will be needed by the market.

GUIDANCE NOTE 2

DISCLOSURE OF SIDE ARRANGEMENTS IN THE CONTEXT OF FORCE MAJEURE

Legal considerations may require disclosure of certain side arrangements which:

(a) give the Lead Manager a conflict of interest, even if they do not strictly impact on the way the force majeure clause operates; and

(b) relate to the way in which the force majeure clause would operate.

GUIDANCE NOTE 3

FUNGIBLE ISSUES: RECOMMENDATION 1.12.2

Generally, the ICMA Recommendations govern the relationship between the Lead Manager and the rest of the syndicate and – at the point where the Lead Manager invites firms to join a syndicate – the Recommendations look at future events.

However, Recommendation 1.12.2 looks at a prior event – an issue previously launched by what could have been a completely different syndicate. To dis-apply Recommendation 1.12.2 would in practice have a retrospective effect.

Recommendation 1.12.2 is not intended to be capable of dis-application.

GUIDANCE NOTE 4

DUE DILIGENCE

Lead Managers should consider carefully the appropriate level of due diligence to be performed in the context of each issue.

It is impossible to prescribe whether or what due diligence procedures would be appropriate in the circumstances of each issue, and procedures will vary greatly from issue to issue (depending, for example, on the type of securities being issued, the rights attached to those securities and the nature of the issuer and its business).

GUIDANCE NOTE 5

LIMITED PAYMENT OBLIGATIONS

Any limitation on the payment obligations of an issuer or any guarantor is material information for investors. For example, the limitation may be triggered when government action prevents payment in the currency in which the issue is denominated and the consequence is that the holder of the securities has no right to accelerate the issue by calling a default. Payment in the original currency of the issue (together with accrued interest to the date of payment) would not be made until the government authorities permit such payment to be made. Until then, the holder has no right to sue for the unpaid sum. In another example, the guarantee may be conditional upon the holder pursuing its claims against the issuer before claiming against the guarantor, or subject to a monetary limit which may not be sufficient to cover all payments which might be due under the terms of the securities.

This Guidance Note is a reminder that under Recommendation 1.1 and Appendix B (I), early disclosure should be made if any issue or guarantee contains unusual terms. In addition, Recommendation 1.1 requires disclosure of the "basic commercial terms" of an issue.

Careful consideration should be given as to how such disclosure is made. Clearly, in accordance with existing Recommendations, it should be made to co-managers when they are invited to participate in the issue. Disclosure should also be made prominently in the documentation for the issue (particularly in the invitation to managers and any draft or final prospectus). Members should also consider whether an indication of the existence of the limitation should be included in the title to the issue. Without such disclosure, participants in the secondary market (who may not see the documentation for the original issue) may be misled as to the nature of the securities they are buying.

GUIDANCE NOTE 6

This Guidance Note has been withdrawn.

GUIDANCE NOTE 7

This Guidance Note has been moved to Section Four Guidance Note 1

GUIDANCE NOTE 8

PROVISION OF INFORMATION AND DOCUMENTS TO INTERMEDIARIES

Where an issue of debt securities is held through Clearstream Banking S.A. and/or Euroclear Bank S.A./N.V. (the "ICSDs"), it is important that the investors who have the ultimate economic interest in the issue receive relevant information in a timely and accurate manner. To achieve this, the ICSDs and others in the information chain (such as the Fiscal Agent or the Issue and Paying Agent) (together with the ICSDs, the "Intermediaries") need to know what the legal rights of the security holders are. This Guidance Note, which applies only to issues held in this way, is designed to facilitate this information process.

1. PROVISION OF INFORMATION TO OBTAIN CODES AND LEGAL DOCUMENTATION

(a) ISIN/common code allocation and eligibility on issue

A draft of the terms and conditions from the prospectus, or the base prospectus (if not already provided pursuant to paragraph (c)) and draft final terms, should be sent to the ICSDs as early as possible prior to the closing date, to enable the ICSDs to allocate an ISIN/common code and to assess eligibility of the issue for their systems. If the issue is under a programme, these documents should be provided to the Issue and Paying Agent for onward transmission to the ICSDs.

(b) Final copies on issue

Unless previously provided under paragraph (c), copies of the documents that establish the legal rights of the holders of the securities (the "Legal Contracts")[1] should be sent to the Intermediaries not later than the end of the closing date[2]. For issuances under programme, the final terms should be sent to the Issuing and Paying Agent no later than two business days prior the closing date (or, where the period between launch and closing is shorter than two business days, as soon as is

reasonably practicable). The copies should be marked as "Final" or "Execution Copy". These documents will vary according to circumstances but, by way of example, will include the global note, with the terms and conditions of the securities attached (or, for a programme issue, the Final Terms with the terms and conditions from the base prospectus[3]), the Fiscal or other Agency Agreement or Trust Deed and Paying Agency Agreement and any agreement that relates to the calculation of amounts payable under the securities.

(c) Final copies of programme documents on establishment/update

On the establishment of a programme, a copy of each of the final base prospectus, including the form of Final Terms, and the Trust Deed (if any) and Agency Agreement should be sent to each Intermediary no later than the end of the business day following the closing date of the first drawdown, and any update/supplement should be sent to each Intermediary within one business day of its finalisation.

2. PROVISION OF PROSPECTUS AND OTHER DOCUMENTATION

(a) Where any Intermediary is to perform actions, then unless these procedures have been agreed and operated by that Intermediary in a previous transaction, they should be discussed and agreed with the Intermediary as early as possible during the documentation of the transaction, prior to the closing date, to enable the ICSDs to assess eligibility of the issue.

(b) Unless it has already been supplied under paragraph 1, a copy of the final prospectus or similar document for the issue should be provided to each Intermediary if possible on the closing date and in any event no later than the end of the business day following the closing date, to enable the Intermediary to extract asset servicing critical information needed for efficient and effective processing that is not contained in the Legal Contracts.

(c) Where any changes are made to any of the documentation referred to above, execution/final copies of the documents containing those changes should be provided to the Intermediaries who received

the original documents within one business day following the change to the documentation.

3. NOTEHOLDERS MEETINGS AND OTHER EVENTS AFFECTING SECURITIES

Copies of all communications to holders of securities, including all notices to holders of securities relating to meetings, should be provided, on a confidential basis, to all of the Intermediaries as early as possible and before they are given to the holders. A copy of all resolutions passed or rejected at any meeting of holders of securities should be provided to all of the Intermediaries promptly after the conclusion of the meeting. Where a decision is to be taken by holders of securities that does not involve a meeting or other action envisaged in the Legal Contracts (for example, an offer to exchange the securities for other securities), draft copies of all communications relating to that event should be sent to the Intermediaries, on a confidential basis, no later than the business day before the announcement of the event to enable them to make the necessary operational preparations.

4. DRAFTING

Documents should be drafted with sufficient information to enable the parties and the Intermediaries to identify and contact each other and to understand what each of them is required to do and when they are required to do it.

5. ADMINISTRATIVE DETAILS

(a) Where documents are to be provided to either of the ICSDs, they should be sent in PDF format by email to:

- **Clearstream Banking S.A.** at the following addresses:

  (i) in the case of final documents relating to issues (whether stand-alone or under a programme): finalterms@clearstream.com;

(ii) in the case of all other documents relating to programmes (establishments, updates and issues) or to stand-alone issues[4] where, respectively, the Issue and Paying Agent or the Lead Manager is based in the UK, Ireland or the Channel Islands: newissueslondon@clearstream.com;

(iii) in the case of all other documents relating to programmes (establishments, updates and issues) or to stand-alone issues[4] where, respectively, the Issue and Paying Agent or the Lead Manager is based outside the UK, Ireland and the Channel Islands: newissuesluxembourg@clearstream.com;

- **Euroclear Bank S.A./N.V.** at the following addresses:

(i) in the case of final documents relating to issues (whether stand-alone or under a programme): ni_documentation@euroclear.com;

(ii) in the case of all documents relating to programme establishments and updates: programs@euroclear.com;

(iii) in other cases: new_issues@euroclear.com.

(b) "Business day" means any day except Saturdays, Sundays and public holidays in jurisdictions in which respective parties are operating.

(c) All communications to Intermediaries should include the ISIN code (if available) and name of the security to which they relate.

(d) Where documentation is to be supplied to the Intermediaries pursuant to this Guidance Note, the responsibility for supplying it falls upon the person who is primarily responsible for preparing it.

Notes

[1] *These will vary from issue to issue, but will usually be indicated in the terms and conditions of the securities. For example, the terms and conditions for a typical stand-alone bond will refer to the trust deed (or, if none, the fiscal agency agreement) and the paying agency agreement.*

A bond issued under a programme will refer to the trust deed (if there is one) and the Agency Agreement.

[2] *For New Global Note issues, specific timetables and procedures are defined in the NGN brochure available on the ICMA website.*

[3] *These should be sent once only and when any supplement affecting the terms and conditions is produced, not for every drawdown.*

[4] *Including final documents for programme establishments and updates and draft documents for issues (whether stand-alone or under a programme).*

GUIDANCE NOTE 9

This Guidance Note has been moved to Section Four Guidance Note 2

GUIDANCE NOTE 10

This Guidance Note has been moved to Section Four
Recommendation 4.7

GUIDANCE NOTE 11

This Guidance Note has been moved to Section Four Guidance Note 3

GUIDANCE NOTE 12

This Guidance Note has been moved to Section Four Guidance Note 4

GUIDANCE NOTE 13

This Guidance Note has been moved to Section Four Guidance Note 5

GUIDANCE NOTE 14

This Guidance Note has been moved to
ICMA Standard Documentation IV Annex B

GUIDANCE NOTE 15

DMO CALCULATION TO BE USED FOR TERMINATION CALCULATION IN STERLING BOND ISSUES

The IPMA Market Practices Committee has recently been asked to consider what is the appropriate mechanism for determining the redemption yield on a sterling-denominated eurobond. The Committee takes the view that it is as set out in the United Kingdom Debt Management Office (DMO) in the paper "Formulae for Calculating Gilt Prices from Yields", page 4 Section One: Price/Yield Formulae: Conventional Gilts; Double-dated and Undated Gilts with Assumed (or Actual) Redemption on a Quasi-coupon Date" (published 8/6/1998). The IPMA Legal & Documentation Committee supports this view.

The reasoning behind this approach is that sterling issues are usually priced off gilts and fewer mismatches will generally be created if the gilts approach is mirrored more fully. A different approach may still be appropriate in particular cases, for instance in structured transactions.

The approaches previously used, such as the Spens clause, are no longer recommended unless there are specific reasons.

GUIDANCE NOTE 16

INFORMATION CLAUSES IN SOVEREIGN DEBT ISSUES

If debt issues of sovereign issuers are to include financial and other information covenants, the following clause may be considered as a model which can be included in the terms and conditions.

For the purpose of this Guidance Note, 'sovereign' includes Central Banks, but does not include 'sub-sovereign' issuers, such as regional and local authorities and municipalities, or sovereign-guaranteed issuers.

MODEL CLAUSE ON FINANCIAL AND OTHER INFORMATION

(a) SDDS Reporting

So long as any of the Notes remains outstanding, the Issuer shall maintain its subscription to and fully comply with the SDDS[; provided, however, that, if the Issuer does not, at the date of issuance of the Notes, subscribe to the SDDS, then it shall subscribe to and fully comply with the SDDS no later than *[third anniversary of the Issue Date]*].

For these purposes:

(i) "**SDDS**" means the Special Data Dissemination Standard established by the International Monetary Fund as in effect from time to time; and

(ii) any matter which the SDDS specifies as being encouraged (rather than mandatory) shall be regarded as being mandatory.

(b) Rolling 12 Month Forecasts

So long as any of the Notes remains outstanding, the Issuer shall prepare and publish (in the same manner in which data required under the SDDS needs to be published), no later than [10] business days after each Quarter Day in each year, the following:

(i) a 12 month projection (prepared as from such Quarter Day) in respect of each of those aspects of the central government budget which are required to be produced on an actual basis under the SDDS; and

(ii) a 12 month projection (prepared as from such Quarter Day) in respect of each of the inflation figures which are required to be produced on an actual basis under the SDDS;

provided, however, that, if the Issuer does not, at the date of issuance of the Notes, subscribe to the SDDS, then the above-mentioned projections shall be required as from the earlier of (x) the first Quarter Day to fall after the Issuer does subscribe to the SDDS and (y) the first Quarter Day to fall after *[third anniversary of the Issue Date]*.

For these purposes "**Quarter Day**" means, in relation to a year, 31 March, 30 June, 30 September and 31 December of that year.

(c) Other Information

So long as any of the Notes remains outstanding, the Issuer shall provide the following information in reasonable detail no later than [10] business days after agreement on the applicable arrangements (or in the case of paragraph (v) below, no later than [10] business days after the request from the Fiscal Agent), namely:

(i) the terms of any agreed minute, procés verbal or other similar record of agreed Paris Club arrangements relating to any indebtedness (whether by way of guarantee or otherwise) of the Issuer or any of its agencies (and shall ensure that the stock of affected debt and applicable rescheduling terms are described);

(ii) the terms of any bilateral agreement entered into pursuant to a Paris Club arrangement relating to any indebtedness (whether by way of guarantee or otherwise) of the Issuer or any of its agencies (and shall ensure that the stock of affected debt, interest terms and other applicable rescheduling terms are described);

(iii) corresponding information to that described in (i) or (ii) above in relation to restructuring arrangements (whether by amendment, exchange offer or otherwise) relating to any indebtedness (whether by way of guarantee or otherwise) of the Issuer or any of its

agencies with any other creditor or creditors not participating in Paris Club arrangements where the aggregate amount of affected indebtedness exceeds US$[ ] (or its equivalent in any other currency or currencies);

(iv) the terms of any standby, extended funds or similar facility settled between the Issuer, its government or any ministry of the Issuer and the International Monetary Fund (including a copy of any related technical memorandum); and

(v) such other information as the Fiscal Agent (acting at the instruction of holders of not less than 5 per cent of the aggregate principal amount of the outstanding Notes) may from time to time reasonably request.

All such information shall be provided to each of the Relevant Industry Bodies for publication on their respective websites. For these purposes, "**Relevant Industry Bodies**" means, the Emerging Markets Traders Association (EMTA), the Emerging Markets Creditors Association (EMCA) and the Institute of International Finance (IIF) and in each case includes any successor thereto.

(Additional language for Notices provision)

In addition, notices and other information required to be given to the Noteholders shall be given to the Relevant Industry Bodies for publication on their respective websites.

GUIDANCE NOTE 17

THE CALCULATION AGENCY ROLE WITH RESPECT TO CERTAIN DERIVATIVE-LINKED SECURITIES

1. INTRODUCTION

The International Capital Market Association (ICMA) and the International Swaps and Derivatives Association (ISDA) are jointly publishing this explanatory note summarising certain issues which arise in the context of issuance of debt securities with embedded derivatives ("derivative securities").

The purpose of this explanatory note is to promote awareness among the full range of market participants of certain issues as requiring careful consideration on a case-by-case basis. Market practice in this area is continually evolving and individual transactions are structured according to their specific circumstances, including the jurisdictions which may be relevant. Commercial considerations may also vary. This explanatory note is therefore not intended to prescribe or endorse particular structures or practices or recommend standard solutions to the issues highlighted.

The issues addressed in this explanatory note relate principally to:

(a) the role of the calculation agent appointed to make determinations relating to the embedded derivative – for instance, adjustments for corporate events in relation to an underlying share issuer; and

(b) the inter-relationship between the derivative securities and any associated hedge, particularly where the hedge provider is also calculation agent under both the hedge and the derivative securities (often the case where the hedge provider is arranger, manager or dealer in relation to the derivative securities and not uncommon even where the hedge provider has no such involvement).

This explanatory note is not intended as a full discussion of all the considerations relating to the role of Calculation Agent under an OTC

derivative; specifically, the note is not intended to suggest that the role and responsibilities of the Calculation Agent as defined in various ISDA publications, including the 2002 ISDA Equity Derivatives Definitions and the 2003 ISDA Credit Derivatives Definitions, should be amended.

Executive Summary

The purpose of this explanatory note is to highlight, in the context of securities with embedded derivative features, the importance:

(1) of identifying as early as possible who is to be calculation agent in relation to the securities and to allow adequate time to agree the terms of its appointment; and

(2) of clarity as to the role and responsibilities of the calculation agent in relation to the derivative securities, so that in particular:

- *any operational or infrastructure requirements are identified and understood;*
- *any additional responsibilities over and above those that the calculation agent may have as calculation agent under an associated hedge are identified and understood;*
- *any liability issues can be considered by the prospective calculation agent;*
- *the parties can be satisfied that the remuneration to be paid takes account, to the extent appropriate, of any additional liabilities; and*
- *any disclosures, particularly any relevant risk disclosures, that may be appropriate with respect to the calculation agency arrangements can be made in the issuance documentation.*

2. CALCULATION AGENCY ROLE

2.1 Identification

Identifying who will act as calculation agent for an issue of derivative securities (and any associated hedge) should be settled at an early stage.

Many securities programmes contemplate that the fiscal agent or principal paying agent will perform the role of calculation agent, unless otherwise agreed. However, while the appointment of fiscal agents and principal paying agents as calculation agents is common for rate-fixings in relation to vanilla floating rate notes, fiscal agents and principal paying agents may not be willing, nor indeed well placed, to perform the more specialised calculation agent role contemplated in derivative securities.

Where the arranger, manager or dealer (the "arranger") in relation to derivative securities is also the hedge provider, and the calculation agent under the hedge, it is common, and often logical, for the arranger to be the calculation agent in respect of the derivative securities.

Where the hedge provider is otherwise independent of an issue of derivative securities, before it accepts appointment as calculation agent under the derivative securities, it should consider the differences between the role of the calculation agent under the bilateral hedge and under the derivative securities. For example: the scope of the role under the derivative securities usually includes not only making the relevant determinations but also additional administrative duties such as notification requirements. In the case of derivative securities, the calculation agent's determinations are relevant, and thus of interest, to the holders of the securities. This should be borne in mind by the calculation agent, particularly where the determinations to be made are either complex or dependent on data that are not widely available. A prospective calculation agent should satisfy itself that it considers it is being appropriately remunerated for the responsibilities (and any risks) it may be undertaking by assuming this role.

The appointment of the calculation agent should be appropriately documented.

2.2 ***Timing***

The calculation agent appointment for an issue of derivative securities may raise timing issues, particularly where the hedge provider is not involved in the issue as arranger, manager or dealer. See further paragraph 4 below.

2.3 ***Notifications***

Notifications are an important practical part of the calculation agency role under derivative securities.

Under a bilateral hedge, the calculation agent simply notifies the two parties (or, in practice, since the calculation agent is typically one of the parties, the other party) of its determinations. In the case of derivative securities, parties interested in being informed of the outcome of a determination will include the issuer, the principal paying agent or fiscal agent, the trustee (if any) for the holders of the securities and the holders themselves. Those who agree to act as calculation agent therefore need to have the systems in place to give the required notices – and if they do not, then the terms of the derivative securities should allocate this responsibility to another party (for instance, by providing for notification by the calculation agent of its determinations to the fiscal agent, and thereafter by the fiscal agent to the holders of the derivative securities)[1].

A practical consideration is that it could be helpful for market participants to establish a mechanism for maintaining records of calculation agent appointments, to make it easier for issuers, fiscal agents and others to contact the right person to obtain information about calculation agent determinations (albeit the responsibility for giving any required notification will remain with the calculation agent).

2.4 ***Disclosures to investors***

Disclosure documentation relating to derivative securities will include disclosure of the terms of the calculation agency appointment. The calculation agent should satisfy itself as to the accuracy of such disclosure.

In addition, if the calculation agent has accepted any restrictions on its exercise of its discretion, that should usually be disclosed (for example, where an issue of derivative securities is hedged through several different hedges, each with a different hedge provider, and the calculation agent with respect to the derivative securities has agreed to co-ordinate its determinations with respect to the derivative securities with the determinations made under the various different hedges).

If any activities of the calculation agent (for example, its proprietary trading activities) could give rise to possible conflicts of interest, that too is likely to require disclosure, and may require specific reference in the risk factors disclosed with respect to the particular issue of securities.

3. MATCHING OF TERMS

3.1 While issuers of derivative securities wish the terms of the securities to match the hedge, they may not always appreciate that a complete match is impracticable. For instance, where the hedge is governed by an ISDA Master Agreement, there will be events, such as illegality affecting the ability of one of the parties to perform its obligations under the hedge or various party specific default events, which will not be reflected in the terms of the derivative securities, and which could result in the hedge being terminated early, but with the securities remaining outstanding. Similarly, changes in tax treatment could affect the hedge but not the securities or *vice versa*.

These risks could in theory be passed through to the investors in the securities, for instance by permitting the issuer to redeem the securities early if the hedge terminated early. However, quite apart from necessitating disclosure of the hedge arrangements, this would result in the holders of the securities being subject to risks arising out of the issuer's hedging relationship. This is generally not likely to be acceptable to the market.

3.2 Some issuers request the hedge provider to agree that, if there is any discrepancy between the hedge terms and the terms of the derivative securities, the latter will prevail. Hedge providers are unlikely to be in a position to agree. First, it is not necessarily

appropriate that all terms should match (as explained in 3.1 above), and any such agreement may have to recognise appropriate exceptions, identifying and negotiating which may take time and incur expense. Secondly, at a practical level, hedge providers are likely to want their hedge documents to match standard OTC derivative market terms so as to match the terms on which they can themselves hedge in the commercial market. If they agree to the terms of the securities prevailing, this could make hedging considerably more difficult. Moreover, for a hedge provider which is not involved in the issue of the securities, it may be difficult to see any commercial rationale for accepting this additional layer of risk.

4. TIMING ISSUES

4.1 An important practical issue is allowing adequate time before the closing of an issue for the parties to review and negotiate the detailed terms of the hedging arrangements (taking into account matching considerations as noted above) and the terms of an appointment as calculation agent under the derivatives securities.

A period of not less than 7 working days from initial circulation of draft documentation ought generally to be allowed for finalising the hedge documentation and the terms of a calculation agent appointment. In particular circumstances, a reasonably lengthy period may be appropriate, for instance, where other parties such as rating agencies need to be included in reviewing the terms of the appointment or the hedge. Another example would be where an institution, which is not otherwise involved in the underlying transaction, is invited to bid for a calculation agency role and needs a longer period to review its rights and responsibilities because the transaction documentation is in an unfamiliar language or subject to an unusual governing law or otherwise in a form, or on terms, which are not typical for such transactions.

4.2 The form of the hedge will typically be a privately negotiated bilateral (or "over-the-counter") derivative transaction applying one of the sets of terms ("definitions") published by ISDA, such as the 2002 Equity Derivative Definitions or the 2003 Credit Derivatives Definitions. The detailed terms and conditions of

the derivative securities will generally need to reflect equivalent provisions, as nearly as the circumstances permit. While some note and warrant programmes incorporate ISDA definitions based provisions into their base programme terms and conditions, many do not and address this through additional drafting in the documentation of the particular issue. Due time allowance should be made for this in determining the period allowed between the trade date and the settlement date.

Note

[1] *The importance of notification arrangements was highlighted by the Financial Services Authority in a "Dear CEO" letter in February 2005 (titled "Operations and risk management in the credit derivatives market"), which noted that mechanisms for disseminating rate-fixing information used for calculating interest and principal payments are not always effective – particularly in financial institutions originating structured debt with an associated derivative which accept the role of calculation agent but not of paying agent. Although contained in a letter specifically addressing credit derivatives, the issue is not specific to credit derivatives, and is equally applicable for a range of derivative securities. The letter stated that calculation agents should ensure that they have effective systems for advising paying agents and issuers on a timely basis of rate or index determinations, so that custodians and investors may in turn be notified of impending cash movements.*

GUIDANCE NOTE 18

DENOMINATIONS OF €50,000 AND INTEGRAL MULTIPLES OF €1,000

(a) Guidance Note on Denominations of €50,000 and integral multiples of €1,000

(b) ICMA and ICMSA Guidance Notes on "50k + 1k" Denominations: Joint Statement on the Application of the New Requirements.

GUIDANCE NOTE ON DENOMINATIONS OF €50,000 AND INTEGRAL MULTIPLES OF €1,000

The ICMA is publishing this Guidance Note summarising the key issues which arise in the context of issuance of bearer debt securities with a denomination being €50,000 and an integral multiple of another lesser amount, usually €1,000 ("50k+1k denominations").

The EU Prospectus and Transparency Directives provide for a less onerous disclosure regime for issuers of securities with a denomination per unit of at least €50,000 (or its equivalent in another currency). To take advantage of this regime, while minimising the impact of large denominations on liquidity, some market participants have been issuing notes in denominations of €50,000 but providing in the terms and conditions that, whilst the notes were in global form and held in the ICSDs, they were permitted to trade in minimum amounts of €50,000 plus multiples of a lesser amount, usually €1,000 ("tradeable amounts") thereafter. This had the result that the ICSDs would permit the notes to be transferred in amounts of, e.g., €51,000, €52,000, €53,000, etc. (but never in amounts lower than €50,000) depending on the preferences of the parties. If definitive notes were required to be printed, they would be printed in denominations of €50,000 only.

Paying agents and the ICSDs expressed concerns about this arrangement, in particular with respect to misuse of terminology and consequent lack of clarity. Therefore, it will now be possible to achieve the same flexibility in trading amounts only by using 50k+1k denominations. The key difference is that with 50k+1k denominations, the range of situations where definitive notes may be printed is limited and, in the theoretical case that such a situation occurs, definitive notes would be printed in denominations of €51,000, €52,000, €53,000, etc., up to €99,000.

The concept of 50k+1k denominations gives rise to a number of questions which need to be carefully considered if they are to operate in a manner which meets the expectations not only of investors but also of paying agents, the ICSDs and the relevant exchanges.

A working group of members of the ICMA Legal & Documentation Committee and City of London capital markets law firms has extensively

discussed practical issues associated with 50k+1k denominations and their impact on issue documentation. The discussions were closely co-ordinated with the International Capital Market Services Association (the ICMSA), the trade association representing paying agents and ICSDs.

In November 2006, the ICMSA published a paper entitled *"Guide to the Treatment of Denominations and Related Exchange Conditions"* (the "ICMSA Paper"). The ICMSA Paper summarises the requirements relating to denominations and exchange of the notes from global to definitive form which the ICMSA expect an issuer to comply with if the issue is to be admitted into the ICSDs. The purpose of this note is to provide background to the ICMSA Paper and summarise the conclusions of the discussions on 50k+1k denominations.

This Guidance Note applies only to bearer notes (where security printing considerations are relevant), not to registered notes (the terms and conditions of which often allow for multiple denominations) or other wholly dematerialised notes.

The suggestions made in this Guidance Note are based on the assumption that the notes are deposited with the ICSDs and not other clearing systems which may have other requirements concerning denominations or tradeable amounts. This Guidance Note also assumes that any local legislation in a jurisdiction relevant to the notes does not prevent the issuer from issuing 50k+1k denominations. Issuers should seek local legal advice in particular where the law of incorporation of the issuer or the governing law of the notes is not English law. At the time of this Guidance Note, 50k+1k denominations are not acceptable or may be problematic (at least in some scenarios) under the laws of Germany, France, Spain, Italy and Luxembourg. In addition, where the notes are intended to be traded on a stock exchange or other similar market, the issuer should make sure that the trading system of such a market is able to accommodate the 50k+1k denominations.

Using 50k+1k Denominations

When using the 50k+1k denomination, the issuer must (a) meet the requirements of the ICMSA for its acceptability and (b) properly document it.

Satisfaction of the ICMSA Requirements

There have been concerns about the operation of 50k+1k denominations in practice, in particular about the consequences where a global note may be exchanged for definitive notes. That is because the printing and delivery of definitive notes in denominations corresponding to the actual various holdings of the noteholders, i.e., €51,000, €52,000, €53,000 up to (and including) €99,000 would be logistically difficult for the issuer, investors, paying agents and the ICSDs. Issuers should also consider the potential costs involved in the printing and delivery of definitive notes in such a manner.

Consequently, the ICMSA has stated in the ICMSA Paper that 50k+1k denominations will only be acceptable where the events triggering delivery of definitive notes are, in practice, unlikely to occur. According to the ICMSA Paper, if the terms of a global note provide the issuer or a noteholder with an unrestricted option to exchange for definitive notes at any time, the ICSDs will not accept those securities if they provide for 50k+1k denominations. The ICSDs will, however, accept securities which provide for 50k+1k denominations if the terms of the global note provide for exchange into definitive notes **only** in the case of (i) a closure of one or both ICSDs, (ii) issuer default, and (iii) adverse tax consequences to the issuer as a result of the notes being in global form[1] (this is a broad characterisation of the relevant events and it is not intended to prescribe specific language which is expected to differ on a case-by-case basis). While events sub (i) and (iii) are unlikely to occur, events sub (ii) may occur but are unlikely to actually lead to the delivery of definitive notes. If (theoretically) one of such events was to occur and definitive notes were to be delivered, they would be printed in denominations from €50,000 to €99,000 (assuming the integral multiple is €1,000).

Documenting 50k+1k Denominations

The ICMSA Paper illustrates, with specific examples, how use of incorrect terminology in the offering documentation may be misleading. The language mentioned in the ICMSA Paper and other language inconsistent with language suggested below should be avoided. The offering documentation should refer only to “denomination” and avoid the use of other terms, such as tradeable or minimum tradeable amounts.

In particular, the ICMSA Paper seeks to end the practice of documenting issues with a "denomination" of €50,000 and "tradeable amount" of €1,000.

The following is an example of the language to be included in the terms and conditions of a stand-alone issue of debt securities which correctly specifies the 50k+1k denominations:

> *The Bonds are in bearer form and in the denominations of €50,000 and integral multiples of [€1,000] in excess thereof, up to and including [€99,000]. No definitive Bonds will be issued with a denomination above [€99,000].*

The following is an example of the language to be included in the terms and conditions of an issue of debt securities under a programme (in the Final Terms) which correctly specifies the 50k+1k denominations:[2]

> *PART A – CONTRACTUAL TERMS*
>
> | | |
> |---|---|
> | *Specified Denominations:* | *€50,000 and integral multiples of [€1,000] in excess thereof up to and including [€99,000]. No notes in definitive form will be issued with a denomination above [€99,000].* |

The following is an example (referred to in the ICMSA Paper) of the language to be included in the prospectus of debt securities (for example in the section describing the notes while in global form) which correctly reflects the operation of the 50k+1k denominations while the securities are in global form and held with the ICSDs:

> *"So long as the Notes are represented by a temporary Global Note or permanent Global Note and the relevant clearing system(s) so permit, the Notes will be tradeable only in the minimum authorised denomination of €50,000 and higher integral multiples of [€1,000], notwithstanding that no definitive notes will be issued with a denomination above [€99,000]."*

The examples above assume that the terms and conditions of the issue (programme) comply with the ICMSA requirements. Care should be

taken when this wording, as well as other instances of suggested wording contained in this note, are used in practice. In all cases, the entire documentation should be carefully reviewed to ensure that it complies with the ICMSA requirements as a whole and that the various references to denominations are consistent with each other and with the rest of the documentation.

Consequences of 50k+1k Denominations

Stub amounts

With 50k+1k denominations, the ICSDs are unable to prevent a noteholder from creating a balance of less than the 50k+1k denomination in its account with the ICSDs. For example, if a noteholder sells €50,000 out of a holding of €97,000, the trade will be settled by the ICSDs, but the accountholder will have a remaining balance of €47,000 in its account – a stub amount. As long as the issue is held in the ICSDs, the noteholder will be unable to transfer this amount.

A stub amount holder should not be disenfranchised. As long as the issue is held in the ICSDs, the stub amount holder should have the same rights as a noteholder holding a 50k+1k denomination, other than the right to transfer the stub amount and the right to receive definitive notes, as described above.

The documentation should reflect this fact. In particular, the various rights of a noteholder should not be related to holding of a note but to a nominal amount of a note, e.g., €1 or €1,000.

Issuers may wish to consider whether a risk factor should be included in the prospectus in respect of the fact that as long as the issue of debt securities is held in the ICSDs, a stub amount holder is unable to transfer the stub amount. The following is an example of the language for such a risk factor:

> *In relation to any issue of Notes which have a denomination consisting of the minimum Specified Denomination plus a higher integral multiple of another smaller amount, it is possible that the Notes may be traded in amounts in excess of €50,000 (or its equivalent) that are not integral multiples of €50,000 (or its*

equivalent). In such a case a Noteholder who, as a result of trading such amounts, holds a principal amount of less than the minimum Specified Denomination may not receive a definitive Note in respect of such holding (should definitive Notes be printed) and would need to purchase a principal amount of Notes such that its holding amounts to a Specified Denomination.

US issuers

Broadly speaking, where the issuer or the guarantor is a US entity, a noteholder's right to request exchange for definitive notes may be required for TEFRA purposes. In such a case, the 50k+1k denominations may not be used as such a right would conflict with the ICMSA requirements. When considering alternative solutions, issuers affected by TEFRA should seek advice from US counsel.

Illustration

By way of an illustration, **Annex 1** sets out, in relation to an MTN programme, the ICMSA requirements for 50k+1k denominations.

Application of the ICMSA Requirements and Grandfathering

The details on timing of the application of the ICMSA requirements, grandfathering of existing issues, fungible issues and programme updates are contained in a separate joint statement of both associations, published together with the ICMSA Paper and this note.

ANNEX 1

USE OF 50K+1K DENOMINATIONS IN RELATION TO AN MTN PROGRAMME

This illustration sets out, in relation to an MTN programme, the ICMSA requirements for 50k+1k denominations. The decision-making tree in the illustration could in any particular case be affected by the principles of grandfathering and treatment of fungible issues, which should be considered separately.

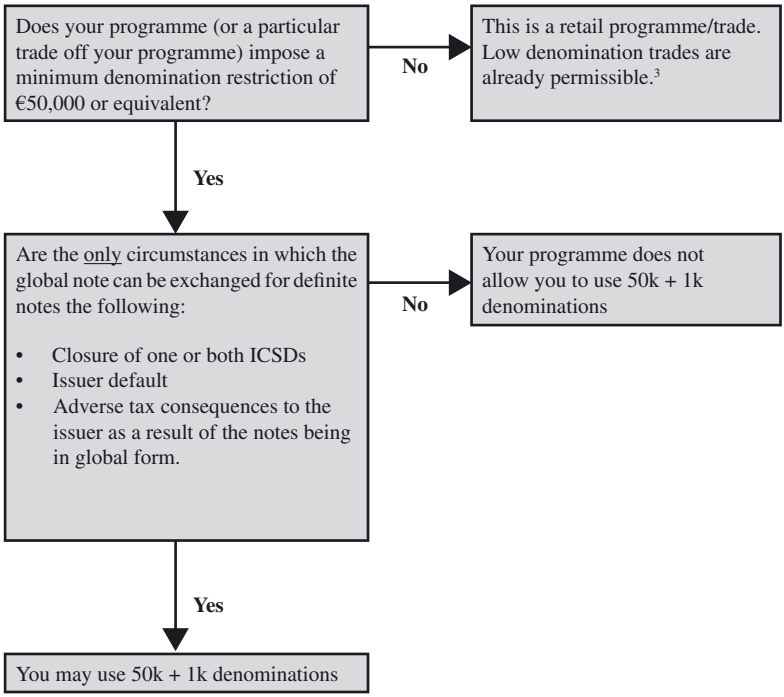

Notes

[1] *Since the quoted Eurobond exemption has been extended to include registered notes, this exchange option is no longer an absolute requirement. It may still, however, be a term in existing programmes.*

[2] *This language will be included in the 2007 revised version of the pro forma ICMA final terms for medium term note programmes.*

[3] *If it is anticipated that an issuer may wish to issue 50k+1k denomination notes off its retail programme, then such an issuer would be advised to include the wording set out in "Documenting 50k+1k denominations", and to include the appropriate statement in the "Summary of Notes while in Global Form" and an appropriate risk factor in the programme prospectus. The analysis set out in the table above should also be followed.*

ICMA AND ICMSA GUIDANCE NOTES ON "50K+1K" DENOMINATIONS: JOINT STATEMENT ON THE APPLICATION OF THE NEW REQUIREMENTS

ICMSA (International Capital Market Services Association) and ICMA (International Capital Market Association) are publishing their guidance notes on the use of "50k+1k" denominations. Under the new ICMSA requirements, issuers using such denominations will in particular be expected to (i) provide for only a limited range of events triggering delivery of definitive notes and (ii) properly describe the denominations in the terms and conditions of the issue.

The two associations are aware of the fact that there are a number of outstanding issues already admitted to the ICSDs which do not provide for 50k+1k denominations in accordance with these new ICMSA requirements. Similarly, documentation of existing debt programmes will usually not fully reflect these requirements.

In order to minimise any disruptions caused by the application of the ICMSA requirements, they will be implemented as follows:

1. Issuers will be expected to comply with the new requirements with respect to issues (both stand-alone and under a programme) launched from **1 January 2007**.

2. The terms and conditions of issues (both stand-alone and under a programme) launched up to 31 December 2006 will not need to be amended to comply with the new requirements.

3. Issuers will not be required to amend the terms and conditions of their existing debt programmes to meet the new requirements so long as, from 1 January 2007, any notes issued under such programmes have a single denomination of €50,000. Should an issuer wish to issue under such a programme in denominations of 50k+1k, it will need to comply with the new requirements and its programme documentation may require an amendment. Such issuers should seek legal advice as to how best this is achieved with respect to particular documentation.

4. The terms and conditions of issues launched from 1 January 2007 will not, however, need to comply with the new requirements if the issue is intended to be fungible with an issue launched prior to that date. Issuers are advised to raise any concerns they may have regarding the application of the new ICMSA requirements with the ICSDs at an early stage.

ICMA GUIDANCE NOTES / PRESS STATEMENTS

GUIDANCE NOTE 19

NEW SAFEKEEPING STRUCTURE FOR REGISTERED NOTES

CHANGES TO LEGAL DOCUMENTATION

From 1 October 2010, registered form global securities, which are cleared through an ICSD[1] and intended to constitute eligible collateral for Eurosystem monetary policy operations, will need to be issued under a new safekeeping structure ("**NSS**"). Securities issued under the NSS will be registered in the name of a nominee of the ICSD acting as common safekeeper ("**CSK**"). Asset servicing functions will be performed by an agent of the ICSDs acting as common service provider ("**CSP**").

The NSS is based substantially on the New Global Note ("**NGN**")[2] structure for bearer notes[3] and introduces, among other things; (i) delivery arrangements (to the CSK); (ii) requirements regarding effectuation by the CSK and (iii) reconciliation requirements with respect to the records of the Registrar and the ICSDs. Certain (albeit more limited) changes will therefore, be required to standard legal documentation.[4]

With respect to the NSS, the ICSDs published in early December 2009 (i) a set of FAQs[5], (ii) a revised CSK election form[6], (iii) a revised issuer effectuation instruction[7], (iv) a revised Issuer-ICSD Agreement for programmes[8] and (v) a revised Issuer-ICSD Agreement for standalone securities[9]. The ICSDs also published (x) two revised issuer effectuation authorisations requiring note destruction on maturity[10] and (y) two revised issuer effectuation authorisations requiring note sending back on maturity[11] Specific NSS webpages have been created by each of Euroclear[12] and Clearstream[13] listing these documents and other information. The ICSDs may publish parallel versions of some of these documents (for example with interactive fields for completion), all of which are equally valid despite some minor differences in wording. The ICSDs may also update these documents from time to time.

Registered form global securities issued under the existing Classic Safekeeping Structure ("**CSS**") before 1 October 2010 will continue to be potentially eligible as collateral for Eurosystem operations until final maturity.

CHANGES AFFECTING DOCUMENTATION[14]

1. EFFECTUATION[15]

(Documents to be amended: Trust Deed, Agency Agreement, Form of Registered Global Note/Certificate, Operating and Administrative Procedures Memorandum, Signing and Closing Memorandum, Form of Effectuation Authorisation)

Where any reference is made to authentication in any of the transaction documents referred to above, an additional reference to effectuation will need to be added.

The form of Effectuation Authorisation will need to be slightly amended to cater for notes held under the NSS as well as for NGNs.

2. PROCEDURAL CHANGES

(Documents to be amended: Agency Agreement, Offering Circular, Operating and Administrative Procedures Memorandum, Signing and Closing Memorandum)

Appropriate amendments will be required to the documents referred to above to reflect relevant NSS procedures namely, the delivery of Registered Global Notes/Certificates and effectuation instructions to the CSK; the effectuation confirmation from the CSK; the payment instructions to the CSP and the confirmations from the CSK regarding the deposit and effectuation of the Registered Global Notes/Certificates. The procedures currently in place for the NGN structure may be replicated for this purpose.

For standalone issues under the NSS (or a programme which contemplates the NSS structure only), references in the Agency Agreement to the common depositary will need to be amended to reflect the fact that the Registered Global Notes/Certificates will be registered in the name of a

nominee of the entity appointed by the ICSDs as their CSK and held by such ICSD CSK and that the other common depositary functions will be performed by the entity appointed by the ICSDs as their CSP.

For a programme which contemplates both the CSS and the NSS, references to the common depositary will need to be replaced by references to "the common depositary or, as the case may be, common [safekeeper/service provider]" depending on the function which is being referred to.

3. NAME OF ENTITY ON THE REGISTER AND GLOBAL NOTE/CERTIFICATE

(Documents to be amended: Form of global Note/Certificate)

The nominee of the ICSD CSK will be named on the register as the registered holder of the registered form global security. A cross-reference should be included in the Registered Global Note/Certificate to the name on the register substantially to the following effect:

"This certifies that the person whose name is entered in the Register is [registered as] the holder of the aggregate nominal amount of [*specify currency and amount*] of [Notes specified therein / an issue of Notes of the nominal amount, specified currency and specified denomination specified in the Final Terms applicable to the Notes]."[16]

4. RECONCILIATION OF THE ISSUE OUTSTANDING AMOUNT RECORDS OF THE ICSDS WITH THE REGISTER

(Documents to be amended: Issuer-ICSD Agreement, Agency Agreement, Trust Deed)

As with the CSS, under the NSS, the register will be conclusive as to the issue outstanding amount.

The current forms of the Issuer-ICSD Agreement for programmes and standalone issues have been amended by the ICSDs to cater for both NGNs and securities held under NSS. In particular, a provision requiring the Registrar to provide information enabling the ICSDs to reconcile their records with the register has been added. A provision clarifying that the register will be conclusive as to the issue outstanding amount may also be

included (either in the Terms and Conditions of the notes or in the form of Registered Global Note/Certificate, as appropriate).

The schedule to the Agency Agreement/Trust Deed setting out the additional duties of the Fiscal/Principal Paying Agent will also need to reflect the additional reconciliation requirements to be included in the Issuer-ICSD Agreement.

5. THE ICSD AS CSK

Similar to the current practice with NGNs, the ICSDs will only agree to safekeep registered form global securities under the NSS if:

(i) the securities meet the Eurosystem's eligibility criteria as to country of incorporation of the issuer;

(ii) the securities are denominated in a Eurosystem eligible currency; and

(iii) the issue documentation indicates that the securities are to be held in a manner that would allow Eurosystem eligibility. The "intention" wording currently used in Part B of Final Terms in the context of NGNs may be replicated for this purpose (see paragraph 6 below).[17]

Additionally, and in line with equivalent current practice with NGNs, registered form global securities that fail to meet the above criteria will be registered in the name of a nominee of a common depositary. However, where criteria (i) and (ii) above are subsequently met, the ICSDs may, at their discretion and on request by the issuer, arrange for the transfer of the global certificate to an ICSD CSK and for the transfer of title to the issue on the register to a nominee of such ICSD CSK.

6. SECURITIES TO BE HELD IN A MANNER WHICH WOULD ALLOW EUROSYSTEM ELIGIBILITY[18]

(Documents to be amended: Offering Circular, Final Terms)

The section of the Final Terms relating to "General Provisions Applicable to the Notes" may be amended substantially as follows (insertions underlined against the ICMA 'PD non-exempt' standard form[19]):

<< PART A – CONTRACTUAL TERMS
[…]

GENERAL PROVISIONS APPLICABLE TO THE NOTES
[…]

24. Form of Notes:	**Bearer Notes:**
	[Temporary Global Note exchangeable for a Permanent Global Note which is exchangeable for Definitive Notes in the limited circumstances specified in the Permanent Global Note]
	[Temporary Global Note exchangeable for Definitive Notes on [ ] days' notice]
	[Permanent Global Note exchangeable for Definitive Notes in the limited circumstances specified in the Permanent Global Note]
	Registered Notes:
	[Regulation S Global Note (US$/€ [ ] nominal amount) registered in the name of a nominee for [DTC/a common depositary for Euroclear and Clearstream, Luxembourg/a common safekeeper for Euroclear and Clearstream, Luxembourg]]
	[Rule 144A Global Note (US$ [ ] nominal amount) registered in the name of a nominee for [DTC/a common depositary for Euroclear and Clearstream, Luxembourg/a common safekeeper for Euroclear and Clearstream, Luxembourg]][20]

[…]

PART B – OTHER INFORMATION

[…]

9. OPERATIONAL INFORMATION

Intended to be held in a manner which would allow Eurosystem eligibility[21]:	[Yes][No] [Note that the designation "yes" simply means that the Notes are intended upon issue to be deposited with one of the ICSDs as common safekeeper[, and registered in the name of a nominee of one of the ICSDs acting as common safekeeper,] [*include this text for registered notes*]] and does not necessarily mean that the Notes will be recognized as eligible collateral for Eurosystem monetary policy and intra-day credit operations by the Eurosystem either upon issue or at any or all times during their life. Such recognition will depend upon the ECB being satisfied that Eurosystem eligibility criteria have been met.][*Include this text if "yes" selected, in which case bearer Notes must be issued in NGN form*]

[…] >>

The above insertions assume programmes catering for both bearer and registered options.

7. Rule 144A ISSUES

Note that the Eurosystem eligibility requirements require all securities to be settled in the Euro area. Therefore, securities cleared through DTCC will not be eligible. In order for securities sold into the US pursuant to Rule 144A to be eligible, such securities will need to be cleared through

Euroclear/Clearstream i.e. the structure in Annex 1 will need to be followed. Those involved in selling securities pursuant to Rule 144A that are intended to be Eurosystem eligible may wish to consider the implications of this for US investors. It should be noted, however, that this is no different to the position that existed prior to the introduction of the NSS arrangements.

Notes:

[1] *The international central securities depositories: Euroclear Bank S.A/ N.V. and Clearstream Banking, société anonyme.*

[2] *Further detail on the NGN structure can be found at http://www.icmagroup.org/Regulatory-Policy/new_global_note_structure.aspx.*

[3] *However, unlike NGNs, registered form global securities issued under NSS will retain the same legal form as standard registered securities issued under the existing Classic Safekeeping Structure. As a result, the ICSDs will not be requiring a legal opinion as condition precedent to acceptance of securities issued under the NSS.*

[4] *It is assumed that, on programmes, issuers will wish to retain the flexibility to issue registered form global securities to be held either under the NSS structure or under the existing structure.*

[5] *http://www.icmagroup.org/ICMAGroup/files/55/558196e6-2970-4b9d-8cdb-fc8f68494b95.pdf.*

[6] *http://www.icmagroup.org/ICMAGroup/files/45/45348f55-1d09-4160-a557-d7afd87c3c59.pdf.*

[7] *http://www.icmagroup.org/ICMAGroup/files/23/23de6df5-0060-41d6-97a9-cce249ba3815.pdf.*

[8] *http://www.icmagroup.org/ICMAGroup/files/26/265f04e3-7ed8-48c0-93a3-ac2ef6fc2d56.pdf.*

[9] *http://www.icmagroup.org/ICMAGroup/files/61/61c2b4ff-e9a5-47f5-b021-dee260d1cdd2.pdf.*

[10] *For standalone securities: http://www.icmagroup.org/ICMAGroup/files/60/6011438e-9395-4656-83d6-a01b22b51df6.pdf; for programme securities: http://www.icmagroup.org/ICMAGroup/files/a3/a3105f74-062e-4f4a-b89f-d69dbf27f0dc.pdf.*

[11] *For standalone securities: http://www.icmagroup.org/ICMAGroup/files/37/3733a6c0-64ee-46da-b591-ea375a2b87ee.pdf; for programme securities: http://www.icmagroup.org/ICMAGroup/files/54/54a73b50-1639-4175-bee7-cf1384b35ed3.pdf.*

[12] *https://www.euroclear.com/site/public/EB/nss.*

[13] *http://www.clearstream.com/ci/dispatch/en/kir/ci_nav/1_settlement/030_new_issues/015_nss.*

[14] *Note that if the programme has already been amended to provide for NGNs to be issued, many of these changes will already be incorporated in that context and will merely require the addition of references to NSS.*

[15] *The new structure requires effectuation of the Registered Global Note/Certificate (for operational purposes). Under English law, legal title to registered notes is obtained through registration. The Registered Global Note/Certificate does not confer title.*

[16] *To assist the operational requirements of the ICSDs, this formulation is preferred to naming the holder in the Certificate itself.*

[17] *As with NGNs, note that the designation that securities are "intended to be held in a manner which would allow Eurosystem eligibility" simply means that the securities are intended upon issue to be deposited with one of the ICSDs as common safekeeper and does not necessarily mean that the securities will be recognised as eligible collateral for Eurosystem monetary policy and intra-day credit operations by the Eurosystem either upon issue or at any or all times during their life. Such recognition will depend upon satisfaction of the Eurosystem eligibility criteria.*

[18] *The ICSDs have indicated that they will only accept under the NSS securities (a) that initially meet two of the Eurosystem's eligibility criteria (i.e. those relating to currency of the issue and incorporation of the issuer) and (b) for which the documentation indicates the securities are intended to be held in a manner which would allow Eurosystem eligibility (see paragraph 5 "The ICSDs as CSK" above).*

[19] *See Section 7-II(b) of the ICMA Primary Market Handbook (http://www.icmagroup.org/getdoc/01bdc622-7bb3-4406-90b9-70ed8fecd836/contents.aspx).*

[20] *The form of FTs in Section 7-II(b) of the ICMA Primary Market Handbook Handbook does not currently address registered notes in detail but will be considered for amendment in due course.*

[21] *Include if the programme allows a choice between NGNs or CGNs or if the Programme specifies NGNs only.*

ANNEX 1

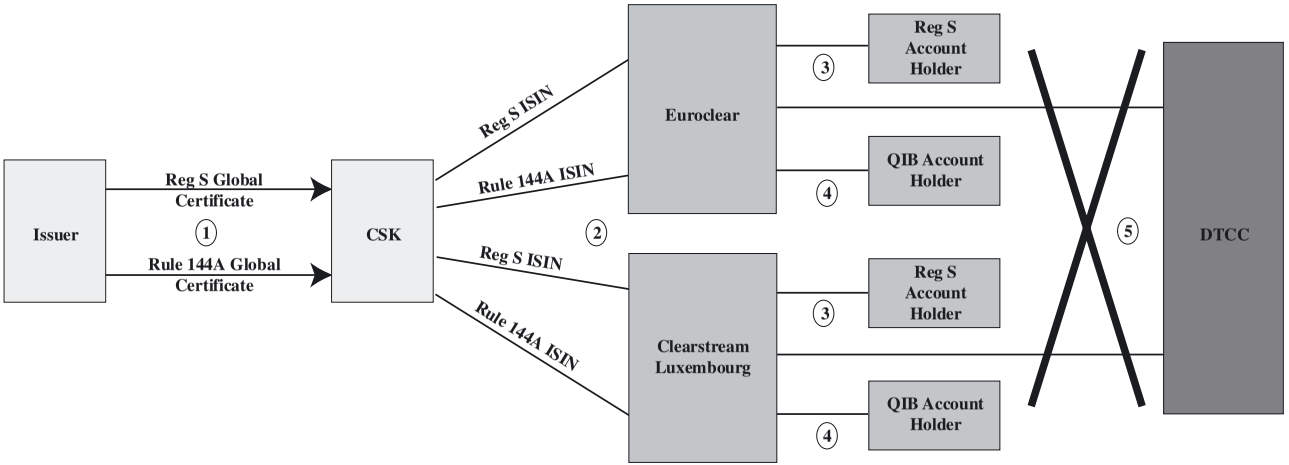

1 Reg S Global Certificate and Rule 144A Global Certificate delivered to CSK
2 CSK notifies ICSDs of issue of Notes
3 Reg S Notes credited to accounts of non-US persons
4 Rule 144A Notes credited to accounts of QIBs
5 No linkage between ICSDs and DTCC, so no DTCC participants

ICMA GUIDANCE NOTES / PRESS STATEMENTS

GUIDANCE NOTE 20

PROSPECTUS DIRECTIVE

CONSIDERATIONS FOR EXEMPT OFFERS AND NON-EXEMPT OFFERS OF SUB-€50,000 DENOMINATION BONDS IN THE EEA

Speed read – Parties to a primary bond issue may find it helpful to:

- generally think of offers of the bonds as being '**PD-exempt**' or '**PD non-exempt**' rather than 'wholesale' or 'retail' – as some low denomination bonds may not be intended for general retail distribution;
- if the issuer prepares a prospectus to enable some 'PD non-exempt' offers, consider '**who**' will be authorised by the issuer to offer using its prospectus, '**where**' (i.e. in what countries) and '**when**' (i.e. during what period);
- bear in mind that any offers not covered by the issuer's prospectus will have to be 'PD-exempt' (unless the relevant offeror prepares his own prospectus);
- notify the market of as much relevant information on the 'who', 'where' and 'when' of the offer at an earlier stage of the book building process, for example by using the screen announcement set out in the Appendix; and
- limit passporting to those countries where 'PD non-exempt' distribution is specifically targeted.

This may vary in accordance with national laws and regulations.

Following the implementation of the Prospectus Directive[1] ("**PD**"), there has been a discernable trend for debt securities to be issued in Europe in denominations of €50,000 or above ("**high denomination bonds**"). Public offers (as defined in the PD) of high denomination bonds are exempt from the requirement to publish a prospectus.

Other notable exemptions from the prospectus requirement include offers (i) to qualified investors, (ii) to fewer than 100 natural or legal persons per EEA country, and (iii) involving a minimum total consideration of €50,000 per investor.

Whilst high denomination bonds continue to be prevalent, there has been a recent upsurge in the number of debt securities issued in Europe in denominations below €50,000 ("**low denomination bonds**"). This guidance note sets out some considerations that may assist firms in determining their approach to offerings in such circumstances.

Terminology – A practice has arisen whereby low denomination bonds are referred to as 'retail' and high denomination bonds are referred to as 'wholesale'. However, it is quite possible that low denomination bonds may not be intended for distribution to retail investors, but rather that such bonds only be distributed using one or more exemptions under the PD. Referring instead to debt securities as offerable on a 'PD-exempt' or 'PD non-exempt' basis may help to clarify issuer and offeror intentions.

Third party offers – If a low denomination bond is issued on a PD non-exempt basis, then offers will be made in the relevant EEA jurisdiction(s) on the basis of an up-to-date prospectus, approved for low denomination offers, and where relevant, passported under the PD. In practice, offerors other than the relevant issuer and manager(s) ("**third party offerors**") may wish to offer in the EEA on the basis of the issuer's prospectus. Whether or not this is possible may depend on a combination of:

(a) who – the parties specifically authorised to offer on the basis of the prospectus; for example, this could be persons individually specified by the issuer or the lead manager(s), initial order book allottees, persons of a defined class or even specified to be 'anyone' otherwise authorised by law to offer securities;

(b) where – in which EEA jurisdictions has the up-to-date prospectus been approved and, if relevant, where it has been passported into; and

(c) when – the length of the period during which the issuer will keep its approved/passported prospectus up to date for relevant offers to be made (this may vary in accordance with national laws and regulations).

If an issuer prospectus is not available for use by third party offerors, they will most likely, under EEA national laws, only be able to offer (i) on a PD-exempt basis or (ii) on the basis of a PD-approved and, if relevant, passported prospectus prepared by such third party offerors. The issuer might or might not be responsible for the third party offerors' actions in this respect, so seeking appropriate legal advice may be particularly relevant. Disclosure in the prospectus of the contractual selling restrictions[2] imposed by the issuer on the managers/underwriters may assist potential third party offerors in assessing their own legal obligations.

Informing initial subscribers – In order to assist potential third party offerors in assessing whether they can offer on the basis of the issuer's prospectus (and so whether, and in what size, to place an order into the primary order book), lead managers may choose to publish an early screen announcement setting out as much relevant information as is practicable. A possible form of wording is set out in the appendix to this note. Additional or alternative means may include a similar notice being sent direct to order book allottees. The approach ultimately taken by the lead manager(s) will depend on the circumstances of each particular issue.

This guidance note is based on the PD as generally interpreted in the European Union and does not constitute legal advice. Application may vary between member states and legal advice should be sought as appropriate.

Notes:

- In reference to point (a) above, if lead managers are to have some role in specifying which third party offerors will be authorised by the issuer to make offers, then it may be worth reflecting this in the lead managers' contractual arrangements with the issuer. Some indication of the basis on which authorised third party offerors may be identified might be set out, as applicable, either in the stand-alone prospectus or in the drawdown final terms. This could then serve as a starting point for third party offerors to verify whether they are authorised.

- In reference to point (b) above, some debt programme prospectuses may be initially passported into a large number of EEA jurisdictions to maximise quick-to-market issuance opportunities. In considering how widely to passport a programme, there may be a trade-off between future issuance flexibility and clarity (from a PD perspective) as to the targeted investor base. In this respect, it may be felt helpful, for individual issues under a programme, to limit use of any programme passports to just those countries where 'PD non-exempt' distribution is specifically targeted. In relation to a particular drawdown under a programme, the final terms might confirm the specific EEA jurisdictions where third party offerors are authorised to use the issuer's prospectus or specify the basis on which such jurisdictions may be identified.

- In reference to point (c) above, third party offerors will want to ensure the issuer's prospectus continues to be up to date until they have completed their offers and should bear in mind that many issuer prospectuses cease to be authorised for use by the issuer for PD non-exempt offers from the issue date of the securities. Some issuers may agree to extend the period during which their prospectus is valid for a specific offer. For example, the stand-alone prospectus or drawdown final terms might specify that third party offerors are authorised to use the issuer's prospectus until a particular date beyond the issue date.

[1] *Directive 2003/71/EC.*

[2] *Often modelled on the ICMA standard form selling restrictions set out in the ICMA Primary Market Handbook: http://www.icmagroup.org/ICMAGroup/files/8f/8f0eac58-6044-40ba-8e90-7e9f7c6bf7fc.pdf.*

APPENDIX

Bonds issued in sub-€50,000 denominations
Possible form of screen announcement / notice wording

"[PD non-exempt: Offers to the public permitted in [each of] [specify EEA jurisdictions] from and including [the date of [publication/filing] of the [prospectus / final terms] / specify date] through to [and including / but excluding] [the settlement date / specify date] [by [authorised persons/ specify] only].]

[Elsewhere in the EEA, offers / PD-exempt: Offers] may only be made to qualified investors (as defined in the Prospectus Directive) or otherwise in compliance with [either] Article 3(2)(c) and (e) of the Prospectus Directive [or, subject to written prior approval of [specify name of lead manager], Article 3(2)(b) of the Prospectus Directive].

See the [prospectus / base prospectus and the final terms] for further details."

Explanatory notes to the form of screen announcement / notice

- Single underlined text is only applicable to an issue where some PD non-exempt distribution is anticipated.

- Wavy underlined text is only applicable to an issue intended to be entirely distributed on a PD-exempt basis.

- Dashed underlined text may be applicable depending on whether and how the issuer intends to allow use of the 100 person exemption. As drafted, this language is assumed to be paired with an issuer statement in the stand-alone prospectus or drawdown final terms limiting reliance on the prospectus in this respect.

PRESS STATEMENT 1

DISCLOSURE OF DISTRIBUTION

Following press discussion in 1989 of the application of Section 47 of the Financial Services Act 1986 to the primary market in Eurobonds, IPMA's Legal & Documentation Committee considered legal advice from leading firms of London solicitors.

A Press Statement was then released indicating that the Committee confirmed that there is no market practice in the Eurobond industry to disclose how much of a new issue has been distributed in the primary market. In these circumstances, the consensus of the legal advice was that there is no obligation to make such disclosure as a result of Section 47 but, if any statement is made, it must of course not be false or misleading.

PRESS STATEMENT 2

JOINT STATEMENT
BY IPMA, ISMA, THE EUROCLEAR OPERATOR AND CEDEL

SEMI-PERMANENT GLOBAL NOTES

(When the Euroclear System and Cedel are the Primary Depositaries and Clearers)

Lead Managers should provide early disclosure of whether a new issue will be in permanent global, semi-permanent global or individual definitive form. When the issue is to be in semi-permanent global form and to clear through the Euroclear System and Cedel, then, in order to maximise the fungibility of the issue (for securities in bearer form that are held by a Common Depositary for the two clearance systems), the whole issue should be exchanged for individual definitive notes when an investor gives due notice that he or she wishes to hold his or her part of the issue in definitive form. This exchange should occur at no expense to the investor. The terms and conditions of the issue should clearly describe the exchange procedure, including the period of time in which the exchange will be performed. Issues represented by semi-permanent global notes that provide for partial exchanges into individual definitive notes at the request of an investor will no longer be accepted by the international clearance systems for all primary issues for which the payment date falls on or after 1 March 1995.

Lead Managers are reminded that IPMA Guidance Note 1 urges IPMA Members to endeavour for retail issues to produce a sufficiently large number of definitive certificates in sufficiently small denominations to meet the anticipated requirements of investors.

PRESS STATEMENT 3

JOINT STATEMENT ON MARKET CONVENTIONS FOR THE EURO

ACI – The Financial Market Association
Banking Federation of the EU
Cedel Bank
European Federation of Financial Analysts' Societies
European Mortgage Federation
International Paying Agents Association
International Primary Market Association
International Securities Market Association
International Swaps and Derivatives Association
Morgan Guaranty as Operator of the Euroclear System (Euroclear)

Economic and Monetary Union presents a number of technical challenges for the international and new domestic (i.e. euro-zone) financial markets. One of these is the need for market participants to prepare for the market conventions that will apply to trading and settlement of the euro money, bond and foreign exchange markets. However, market conventions currently vary across the European Union and there is as yet no agreed set of common conventions for the new single currency. The above named organisations are therefore publishing this joint statement recommending harmonised market conventions for the euro.

Support for Harmonisation

In our views, harmonisation of euro market conventions is desirable, as it would promote liquidity and transparency in the new markets and prevent confusion and disputes for euro trading and settlement. Also, firms and settlement facilities face uncertainty in their systems requirements while this question is left open. We therefore publish the attached bond market, money market and foreign exchange market conventions for the euro with the aim that they establish standards for market practice for the new single currency. We note that parties to a financial contract may always specify their own terms, including day count or other conventions. However, we believe that the attached provide a basis for standard practice, which we strongly recommend to our members and to both public and private

issuers of securities. We note that government issuers in particular have an important role to play in achieving harmonisation, by ensuring the use of common standards for euro-denominated benchmark government bond issues.

Treatment of Legacy and Redonominated Instruments

While harmonisation has strong benefits for new euro-denominated instruments, applying new, harmonised, conventions to existing "legacy" instruments — including bonds that redenominate into euro – presents considerable complications. In light of the legal obstacles associated with revising existing agreed conventions and the dangers of hedging mismatches, if underlying and derivative instruments do not all switch to the new conventions, we conclude that existing conventions should be retained for legacy instruments.

Timing

We propose that the attached agreed standards be adopted for financial instruments entered into after the start of stage three of Economic and Monetary Union on 1 January 1999. We also note that new issues before that date of instruments designed to redenominate into euro should also adopt these standards.

CONVENTIONS FOR THE EURO MONEY MARKETS

Day Count Basis

We recommend the adoption of an **actual/360 basis**.

> We note that this is common practice in EU money markets and has been proposed by the European Monetary Institute as the basis for repo instruments used for open market intervention. This convention would apply to wholesale financial activity; we do not recommend a standard retail market convention.

Settlement Basis

We recommend the adoption of a **spot/two day standard**.

We note that this is the prevalent practice for inter-bank offer rate settlement for most EU currencies.

Fixing Period for Derivatives Contracts

We recommend the adoption of a two day rate fixing convention for derivatives contracts.

Most EU currencies currently provide for a two day period between the fixing of a new floating rate and the date when these new rates become effective (i.e. when the contract actually becomes "reset" to the new rates for the purposes of calculating payments). We believe that this practice should continue and that it would be impractical to shorten this cycle in the near term.

Business Days

We recommend that **TARGET operating days form the basis for euro business days**.

As a practical matter, we believe that the convention for euro business days and TARGET operating days should be identical, to ensure the availability of euro payments arrangements throughout *all* EMU area countries on a day identified as a euro business day. In order to facilitate financial activity throughout the EMU area, we recommend that the number of non euro business days be kept to a minimum and possibly be limited to 1 January and 25 December.

We note that this approach has implications for the operating days of commercial and investment banks and other financial market participants in the EMU area, may raise questions concerning national legislation governing bank holidays it would, for example, mean that institutions unable to make payments specified for a euro business day due to observance of a national holiday would be liable to pay interest for the period of delay.

Finally, we should note that parties to an instrument may well decide to agree to use national business day conventions for the euro, due to the likely absence of full payment services on euro business days in all EMU participant Member States (at least in the short term) or if the use of national business days are more convenient for transactions with domestic counterparties.

CONVENTIONS FOR THE EURO BOND MARKETS

Day Count Basis

We recommend adoption of an **actual/actual basis**.

While many EU markets currently use a 30/360 methodology, in volume terms act/act or act/365 is probably most prevalent in the EU, as it is the convention for French, British and Italian markets. Also, we note that this standard is used in the US and Japanese government bond markets. We note that this is a more exact basis than other methods and presents fewer calculation problems than a 30/360 basis, which largely developed due to systems calculation limitations which have since been overcome.

Quotation Basis

We recommend adoption of **decimals**, rather than fractions, **for bond quotation**.

Quotations in decimals provide for a more accurate and precise methodology of yield calculation, will unify price quotation for government and corporate debt, as well as being easier for screen displays.

Business Days

We recommend that **TARGET operating days form the basis for euro business days**.

Please refer to the commentary above on euro business days in money markets.

Coupon Frequency

We **do not recommend a standardised practice** in this area.

In our view, there are strong arguments for the use of either a semi-annual or annual payment basis as the standard for euro coupon frequency. Semi-annual coupons reduce the credit exposure of investors to issuers and on swaps linked to bonds. They are also

attractive to institutional investors seeking regular income. In volume terms, it is the standard most widely used globally, employed in the US, Japan, UK and Italy. On the other hand, annual coupons are used by most EU countries, involve lower administrative costs and are attractive to some issuers and investors.

The competing merits of both payment bases, combined with a desire to allow flexibility to respond to issuer and investor preferences, leads us to conclude that in this particular area the case for harmonisation is less compelling. While the individual organisations have made recommen-dations in this area, the group does not recommend a standardised practice for coupon frequency.

Settlement Dates

We recommend that the standard settlement date for internationally traded cross-border transactions for the euro remain on a **T plus 3 business day cycle**.

While we note that special value dates may be agreed between buyer and seller, we feel that the current T plus 3 day cycle currently in force should be retained for the euro. However, with the soon to be introduced real time gross settlement systems and the ever-increasing desire to reduce settlement risk, we believe that a move to ever shortening settlement cycles is inevitable. Nevertheless, we feel that it would be inappropriate to introduce such a change at the current time, due to other significant system changes posed by the introduction of the euro.

CONVENTIONS FOR THE EURO FOREIGN EXCHANGE MARKETS

Settlement Timing

We recommend the adoption of a spot convention.

International markets should move to a spot convention for settlement of foreign exchange transactions of the euro and interest accrual should then begin on the second day after the deal has been struck.

Foreign Exchange Quotation

We recommend the adoption of the rule of "certain for uncertain".

In our view, the methodology for the quotation of foreign exchange rates should follow the rule of "certain for uncertain" (i.e 1 euro = x foreign currency). It may not be appropriate to harmonise domestic retail market conventions. This should be left to subsidiarity.

Reference Rate

We recommend that the ECB (or its national central banks) should be responsible for the publication of a daily reference rate.

There would be advantages in having one authoritative closing reference rate, produced at an appropriate time each day and published through a well known and established medium (e.g. a major screen based service).

International
Capital
Market
Association



ICMA PRIMARY MARKET HANDBOOK

FILING GUIDANCE

The pages below should be filed in the ICMA Primary Market Handbook as follows:

1. Contents pages 1-2: These replace the Contents pages already in the ICMA Primary Market Handbook.

2. Recommendation 1.31 replaces that already in the ICMA Primary Market Handbook.

3. Recommendation 1.32 should be inserted into the ICMA Primary Market Handbook after Recommendation 1.31.

3. Section Six : Appendix B Explanatory Note XIII. This replaces the sub-section already in the ICMA Primary Market Handbook.